ALCON LIGHTING

SPECIFICATION SHEET

Shop Now

Project Name: Type: Quantity:

Alcon Lighting 12343 Architectural Beveled LED Cylinder Pendant & Surface Light

INTENDED USE

This beveled cylinder pendant light ensures design flexibility and a consistent aesthetic for commercial and institutional spaces. Combining sleek architectural style with high performance, it delivers daylight-inspired illumination and superior visual comfort. Ideal for a range of applications, the fixture features modular options, multiple sizes, and beam configurations with high-visual-comfort COB LED technology. Its elegant and slender design provides a versatile solution for enhancing commercial spaces with both functionality and style.

Pendant Mount

Surface Mount

FEATURES

Construction: Durable die-cast aluminum with a powder-coated polyester finish
Wattage: 50/75/100% selectable switch
Dimming Driver: 0-10V dims 10%
Emergency Battery: External 90 min. w/ test switch
Color Temperature: 27, 30, 35, 40K
Optics: 15, 24, 36, 60°
Voltage: 120-277V
CRI: 80+, 90+
Life: 50,000 Hours
Warranty: 5 Years carefree for parts & components (Labor not included)
Listings: cULus listed for damp locations

SPEC GRADE · 5 YEAR WARRANTY · WATTAGE SELECTABLE · DAMP · EMERGENCY BATTERY · c UL us

ORDERING INFORMATION Example: 12343-4-P-27K-9-15-WH-BK-AC2-XEM8

Model	Size [1]	Mount	Color Temp	CRI	Optics	Finish	Reflector Finish	Canopy	Pendant Mounting [2]	Options
12343	**4** 4"	**P** Pendant	**27K** 2700K	**8** 80+	**15** 15° Narrow Spot	**WH** White	**WH** White	**Blank** Standard J-Box Mount	**Blank** Not Required	**XEM8** 8 Watt External Emergency Battery
	6 6"	**S** Surface	**30K** 3000K	**9** 90+	**24** 24° Spot	**BK** Black	**BK** Black	**C** Conduit Mount	**AC2** 2' Adjustable Aircraft Cable	**XEM25** 25 Watt External Emergency Battery
	8 8"		**35K** 3500K		**36** 36° Flood		**GO** Gold		**AC4** 4' Adjustable Aircraft Cable	
			40K 4000K		**60** 60° Wide Flood		**CH** Chrome		**AC8** 8' Adjustable Aircraft Cable	
									AC12 12' Adjustable Aircraft Cable	
									ST2 [3] 2' Stem	
									ST4 [3] 4' Stem	
									ST8 [3] 8' Stem	
									ST12 [3] 12' Stem	

1 See more information in Page 2
2 Mounting options are same color as fixture
3 Tilt up to 30°

LUMINOUS EFFICACY

Size	Selectable Wattage	Color Temperature	CRI	Lumen Output	Lumens per Watt
4"	25/18/12W	2700K	80+	2250lm	90lm/w
			90+	1900lm	76lm/w
		3000K	80+	2375lm	95lm/w
			90+	2000lm	80lm/w
		3500K	80+	2450lm	98lm/w
			90+	2050lm	82lm/w
		4000K	80+	2500lm	100lm/w
			90+	2100lm	84lm/w
6"	40/30/20W	2700K	80+	4000lm	100lm/w
			90+	3400lm	85lm/w
		3000K	80+	4200lm	105lm/w
			90+	3560lm	89lm/w
		3500K	80+	4320lm	108lm/w
			90+	3640lm	91lm/w
		4000K	80+	4400lm	110lm/w
			90+	3720lm	93lm/w
8"	58/45/30W	2700K	80+	4930lm	85lm/w
			90+	4176lm	72lm/w
		3000K	80+	5220lm	90lm/w
			90+	4408lm	76lm/w
		3500K	80+	5394lm	93lm/w
			90+	4524lm	78lm/w
		4000K	80+	5510lm	95lm/w
			90+	4640lm	80lm/w

LINE DRAWINGS & DIMENSIONS

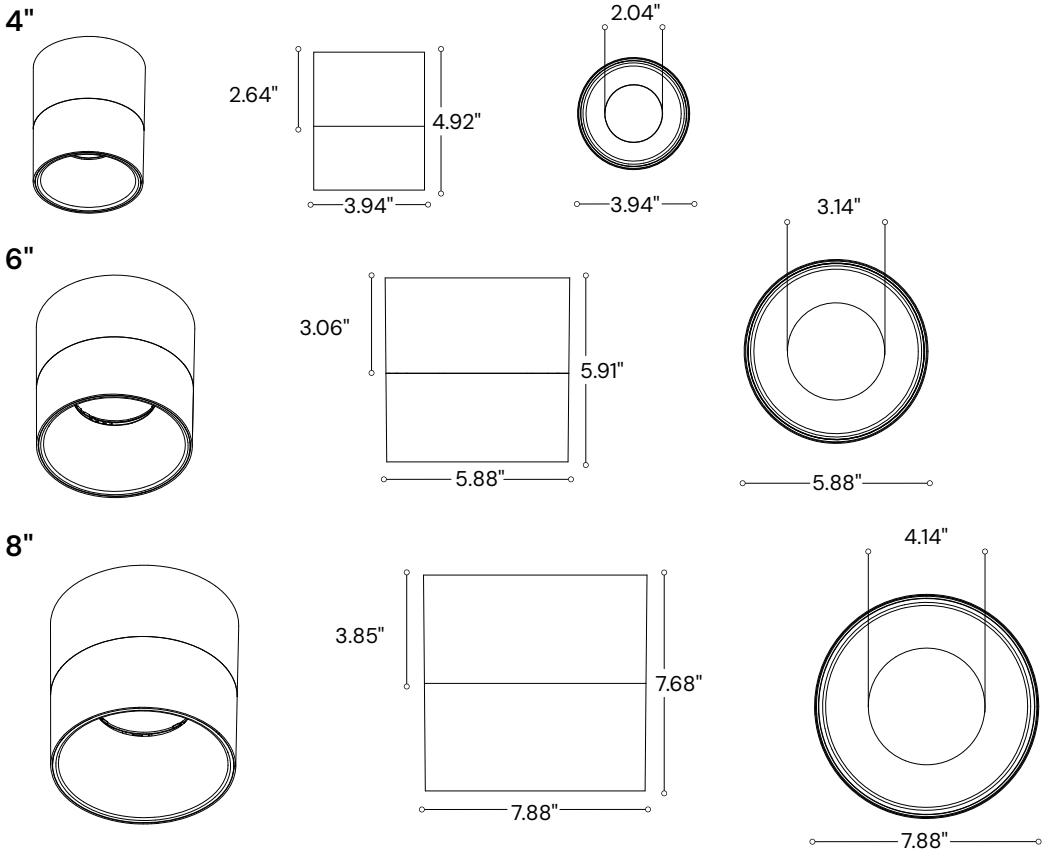

MOUNTING OPTIONS

J-Box Mount

Surface

4" 6" 8"

Conduit Mount

4" 6" 8"

Reflector Finish Options

Black Chrome Gold White

Pendant

Cable Stem

Tilt up to 30°

Cable Stem

Tilt up to 30°

Correlated Reflector Finish	Multiplier for Lumen Output
Black	0.92
Gold	0.97
Chrome	0.94

MOUNTING LOCATION

Pendant

J-Box Mount

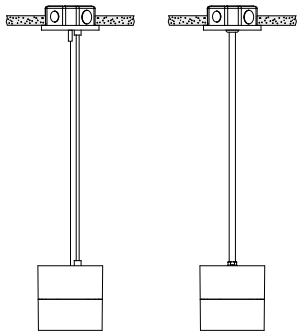

A 4.5" flat canopy is included to cover the junction box, along with a white or black aircraft cable in lengths of 2', 4', 8' or 12' (nominal), which can be adjusted on-site as needed.

For pendant stem mounting, a steel stem with a diameter of 0.48" in the specified lengths of 2', 4', 8' or 12' (nominal) is available in a white or black finish. The junction box can be any of the following shapes:

- 3" octagon
- 4" octagon
- 4" round

Conduit Mount

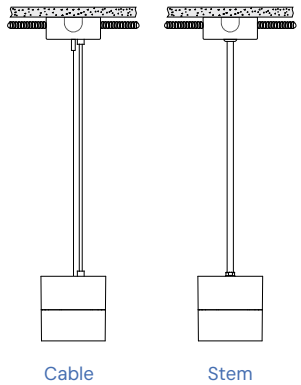

For the standard 4" octagonal junction box surface mounted, a round canopy with a diameter of 5.97" and a depth of 2.38" is provided. Features four key slots, one on each side, that can be configured to accommodate any ceiling layout using a 0.5" or 0.375" conduit.

This deep canopy offers ample space for routing conduit from the junction box to the fixture. The conduit enters through one of the key slots, connecting seamlessly to the fixture within the canopy. These key slots enable flexible installation, accommodating various conduit routing configurations.

Surface

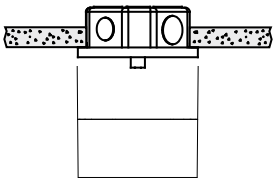

If a compatible recessed junction box already exists in the ceiling, the cylinder light can be mounted directly to it.

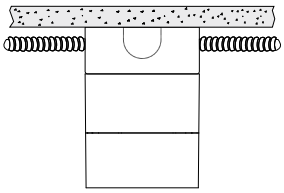

A 5.97" round canopy with a 2.38" depth is provided for installation. Route the conduit from junction box to fixture, ensuring the canopy has enough space to accommodate it.

CONDUIT CONFIGURATIONS

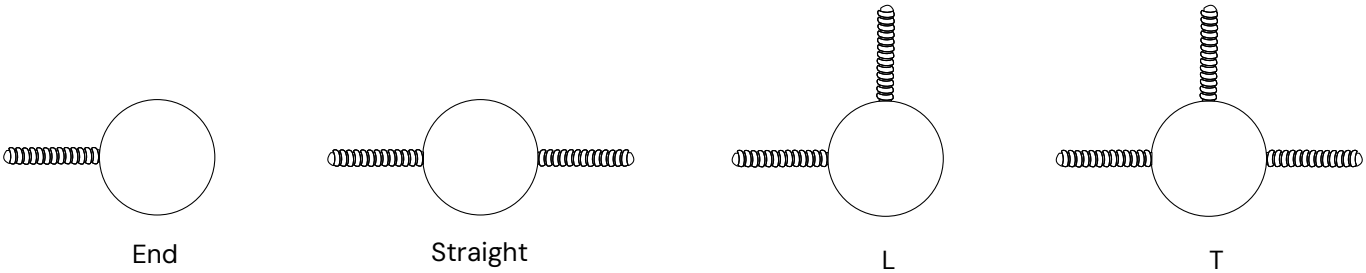

LIGHT DISTRIBUTION

Four Beam Angle options

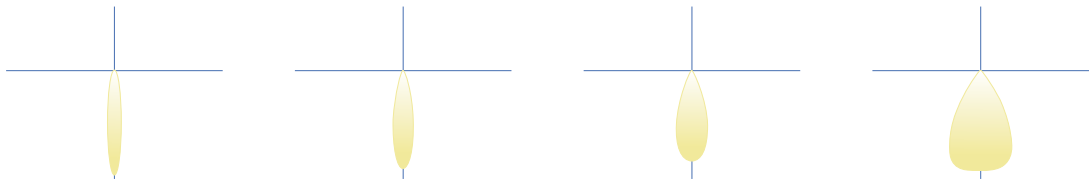

EXTERNAL EMERGENCY BATTERY

Canopy with Indicator

Automatically activates during AC power failure, providing at least 120 minutes of emergency illumination. Equipped with an external test button, it seamlessly returns to charging mode when power is restored, ensuring compliance with life-safety lighting standards.

PHOTOMETRY

4"/ 3000K/ 60°

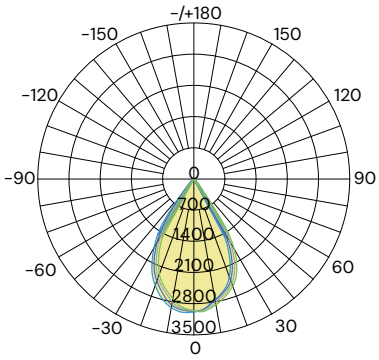

AVERAGE BEAM ANGLE (50%): 61.0°

Lumens: 2612.6 Lm
Watts: 25 W
LPW: 103.94 Lm/W
CCT: 3000K

UNIT:cd
- C0/180, 61.0°
- C30/210, 61.1°
- C60/240, 61.1°
- C90/270, 60.7°

Zonal Flux Diagram

T	CO	C45	C90	C135	C180
10	2751	2786	2868	2917	2931
20	2335	2466	2558	2593	2538
30	1094	1535	1818	1905	1800
40	155.1	194.4	245.3	438.2	400.3
50	62.68	63.03	65.58	79.00	102.6
60	44.26	44.48	45.54	54.19	62.64
70	23.80	23.01	22.92	28.39	34.03
80	2.913	5.007	6.675	7.312	11.58
90	0.1544	0.1118	0.3414	0.4778	0.2661
100	0.0980	0.1167	0 1027 .	0.1260	0.1499
110	0.1725	0.2939	0.8678	0.2707	0.6863
120	0.3081	0.3082	0.3596	0.3502	0.7190
130	0.8022	0.6450	0.4290	0.4484	0.8034
140	2.066	1.785	1.408	1.243	1.589
150	3.714	3.274	2.851	2.718	3.120
160	5.316	4.917	4.461	4.184	4.698
170	6.381	6.205	6.044	5.930	6.233
180	6.788	6.806	6.652	6.657	6.797
DEG	LUMINOUS INTENSITY:cd				

Zonal Lumens

T	ϕ total
0-10	275.7
10-20	1016
20-30	1941
30-40	2403
40-50	2499
50-60	2552
60-70	2587
70-80	2603
80-90	2605
90-100	2605
100-110	2605
110-120	2606
120-130	2606
130-140	2607
140-150	2609
150-160	2610
160-170	2612
170-180	2613
UNIT: lm	

Luminance cd/(m2)

G(DEG)	CO/180	C90/270
85	2079	6732
80	2892	6628
75	8458	9206
70	11997	11556
65	13945	13764
60	15263	15703
55	16203	17152
50	16813	17592
45	17695	27503

PHOTOMETRY

6"/ 3000K/ 60°

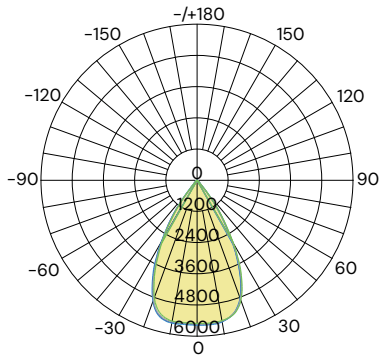

AVERAGE BEAM ANGLE (50%): 59.6°

Lumens: 5046.4 Lm
Watts: 45 W
LPW: 111.38 Lm/W
CCT: 3000K

UNIT:cd
- C0/180, 59.5°
- C60/210, 59.5°
- C30/240, 59.6°
- C90/270, 59.6°

Zonal Flux Diagram

T	CO	C45	C90	C135	C180
10	5529	5511	5486	5486	5576
20	4834	4887	4923	4940	4963
30	2643	2758	2803	2894	2818
40	433.5	487.4	508.0	551.8	472.2
50	100.6	104.4	102.4	105.5	99.85
60	72.33	72.16	70.84	70.56	71.23
70	44.46	45.15	44.15	44.05	43.76
80	18.19	18.90	17.92	18.39	18.56
90	0.1782	0.1447	0.1496	0.1447	0.1447
100	0.1727	0.1868	0 1494 .	0.1821	0.1729
110	0.2565	0.2615	0.2147	0.2568	0.2569
120	0.3688	0.3923	0.3823	0.3596	0.3737
130	1.082	1.047	0.9929	0.9770	1.080
140	3.232	3.112	3.031	2.920	3.318
150	6.392	6.202	6.089	5.889	6.530
160	9.529	9.302	9.245	9.017	9.601
170	12.21	12.07	11.91	11.77	12.11
180	13.29	13.37	13.15	13.16	13.31
DEG	LUMINOUS INTENSITY:cd				

Zonal Lumens

T	ϕ total
0-10	526.3
10-20	2017
20-30	3780
30-40	4714
40-50	4863
50-60	4936
60-70	4993
70-80	5025
80-90	5033
90-100	5033
100-110	5033
110-120	5033
120-130	5034
130-140	5036
140-150	5039
150-160	5042
160-170	5045
170-180	5046
UNIT: lm	

Luminance cd/(m2)

G(DEG)	C0/180	C90/270
85	5141	5059
80	6800	6703
75	7678	7640
70	8441	8382
65	9032	8906
60	9393	9200
55	9336	9072
50	10163	10349
45	14737	15549

8"/ 3000K/ 60°

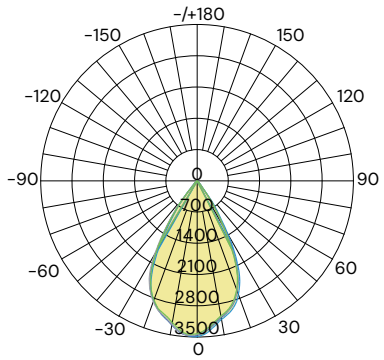

AVERAGE BEAM ANGLE (50%): 57.7°

Lumens: 6000.6 Lm
Watts: 60 W
LPW: 95.85 Lm/W
CCT: 3000K

UNIT:cd
- C0/180, 57.5°
- C60/210, 57.8°
- C30/240, 58.0°
- C90/270, 57.5°

Zonal Flux Diagram

T	CO	C45	C90	C135	C180
10	6752	6641	6582	6635	6997
20	5798	5610	5550	5774	6119
30	2943	2631	2544	3088	3598
40	323.2	281.4	268.1	369.4	569.4
50	101.4	92.02	90.41	103.3	137.4
60	66.11	63.45	62.41	64.37	68.46
70	40.56	38.05	37.37	39.94	43.13
80	16.48	14.58	14.33	16.84	19.29
90	0.1635	0.1495	0.1728	0.1494	0.6340
100	0.1633	0.2008	0 1867 .	0.1961	0.1821
110	0.2426	0.2895	0.2613	0.2755	0.2615
120	0.4150	0.4624	0.4521	0.4110	0.3877
130	1.310	1.501	1.445	1.183	1.038
140	4.020	4.396	4.323	3.738	3.636
150	7.830	3.274	2.851	2.718	3.120
160	11.69	12.09	12.00	11.29	11.30
170	15.06	15.17	14.99	14.64	14.78
180	16.06	16.06	15.84	15.86	16.12
DEG	LUMINOUS INTENSITY:cd				

Zonal Lumens

T	ϕ total
0-10	670.6
10-20	2462
20-30	4629
30-40	5655
40-50	5820
50-60	5892
60-70	5945
70-80	5976
80-90	5984
90-100	5985
100-110	5985
110-120	5985
120-130	5986
130-140	5988
140-150	5991
150-160	5995
160-170	5999
170-180	6001
UNIT: lm	

Luminance cd/(m2)

G(DEG)	C0/180	C90/270
85	2815	2099
80	3569	3101
75	4060	3666
70	4458	4108
65	4761	4451
60	4970	4692
55	5058	4836
50	5932	5288
45	9205	8235

COMPATIBLE DIMMERS

	ALCON LIGHTING	LUTRON	LEVITON	legrand
0-10 V	2100 2101 2102	DVSTV NTSTV-DV MS-Z101	IP710 DD710	RH4FBL3PTC