Model: Titan-7-QS
Titan-10-QS

Forever Bright

SPECIFICATION FEATURES

Finish:	Our naturally etched finishes will withstand the test of time. All finishes are individually treated insuring consistency. Our meticulous application results in a fixture that truly becomes “a one of a kind”.
Electrical:	Available in 12V-15V
Labels:	ETL Standard Wet Label C-ETL

Directional Light

DESCRIPTION

Model#:	Titan-7-QS
Material:	Solid Brass
Finish:	Matte Bronze
Electrical:	12V-15V
Engine:	FB-7W-TA210
Lumens:	210
Color Temp:	2700K
Optic:	Spot, Flood, Wide Flood, Wide Angle Flood
Mounting:	1/2” NPT.

Model#:	Titan-10
Engine:	FB-10W-TA300
Lumens:	300

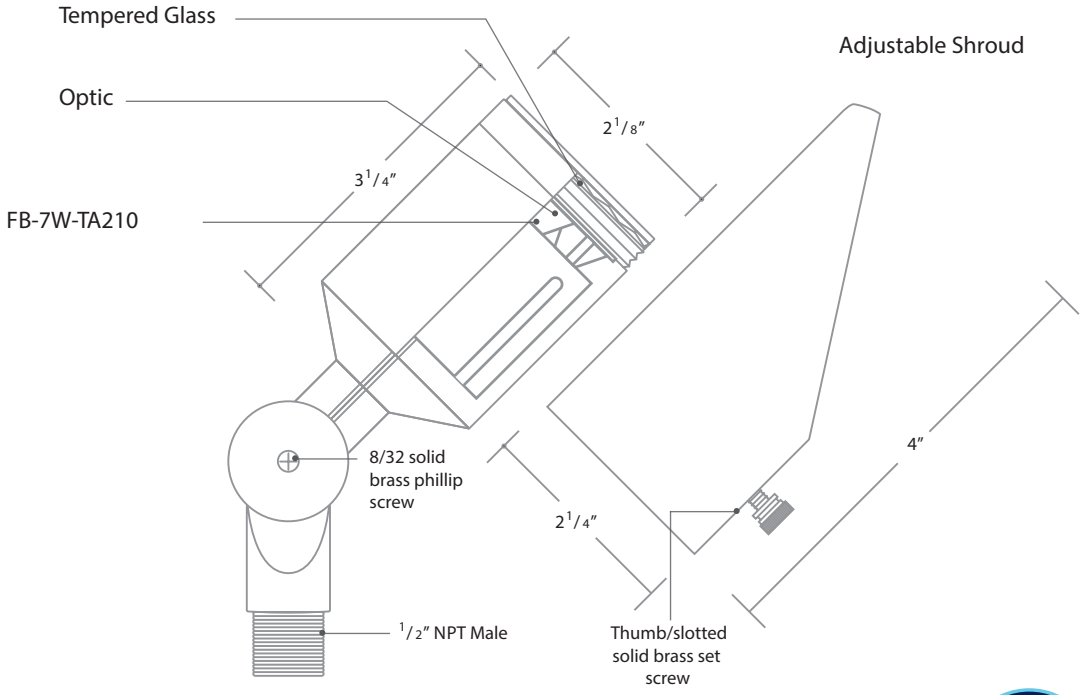

Wet Listed

ORDERING INFORMATION

Model#	Finishes	Wattage	Optics	Lumens	Color Temp.	Electrical
TITAN-7-QS	MBR	7W	FLOOD	210	2700K	12V-15V
TITAN-7-QS TITAN-10-QS	MBR = Matte Bronze	7W 10W	Spot Flood Wide Flood Wide Angle Flood	210 300	2700K 4000K 6500K	12V-15V

WWW.SPJLIGHTING.COM