SS4SG2 / ICS435

4" Architectural LED Square Generation 2 / Wall Wash Reflector

JOB NAME		CATALOG NUMBER	
NOTES		TYPE	

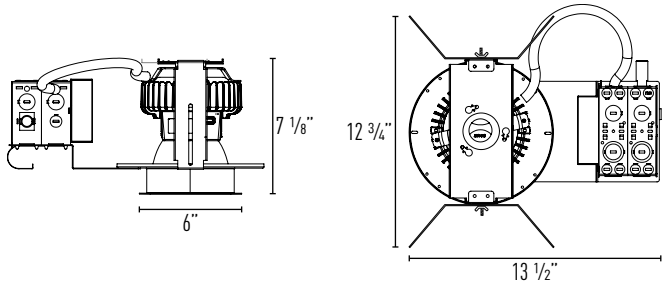

Cut-out: 5 5/8" x 5 5/8"

Order Matrix | Example: SS4SG22000308-27-EM

A	B	C	D	E

A	Series
SS4SG2	4" LED Recessed Square

B	Module Lumen Output
1100	1100 Lumen
1500	1500 Lumen
2000	2000 Lumen
3000	3000 Lumen

C	Color Temperature / CRI
278	2700K / 80 CRI
308	3000K / 80 CRI
358	3500K / 80 CRI
408	4000K / 80 CRI

D	Dimming
blank	0-10V Dimming 10%
-D10V1	0-10V Dimming 1%
-ED10V1	eldoLED 0-10V 1% [1]
-ED10V01	eldoLED 0-10V 0.1% [1]
-LUT1	Lutron Hi-Lume 1%
-LUT	Lutron EcoSystem 1%
-LUT5	Lutron EcoSystem 5%
-EDALI1	eldoLED DALI 1% [1]
-EDALI01	eldoLED DALI 0.1% [1]

E	Voltage
blank	120V
-27	277V

E	Options
-EM	Emergency Backup
-I100	C-Channel Bar Hanger
-I200	Flat Bar Hanger
-I400	Wood Joist Bar Hanger

Notes:
1. eldoLED dimming not available for 3000lm module

Reflector Matrix | Example: ICS435HZ-SF

A	B	C

A	Series
ICS435	4" Square Wall Wash Reflector

B	Reflector Finish
HZ	Haze

C	Trim
-SF	Self Flanged
-SFW	Self Flanged White

Catalog Number	System Wattage *	Delivered Lumens **
SS4SG21100358 / ICS435HZ	15.73W	592lm @ 3500K
SS4SG21500358 / ICS435HZ	18.72W	809lm @ 3500K
SS4SG22000358 / ICS435HZ	24.59W	1023lm @ 3500K
SS4SG23000358 / ICS435HZ	37.58W	1573lm @ 3500K

* System wattage include driver and LED module consumption.
** Delivered lumen output will vary depending on CCT.

LED MODULE
- Powered by OSRAM PrevaLED® Cube LED Module
- 50,000 hours at 70% lumen maintenance
- No heat, mercury or UV
- Available in 1100, 1500, 2000 and 3000 lm
- CRI = 80 & CCT 2700K, 3000K, 3500K, 4000K

ELECTRICAL SYSTEM
- Osram Optotronic® standard with 0-10V dimming to 10%
- Power factor >.9, 50/60Hz
- Multiple dimming options available

OPTICAL SYSTEM
Innovative optical lens directs light at a 20° angle towards wall achieving uniform and even light distribution. Specification grade reflector with 1.2mm thickness. Architectural, discrete polished self flange standard. Optional painted white flange is available.

FRAME CONSTRUCTION
Heavy duty galvanized steel frame with a large access junction box. ETL listed for through wiring. LED light engine and driver are accessible from above or below ceiling.

INSTALLATION
The luminaire is type Non-IC. Insulation must be kept at a minimum of 3" away from fixture. Universal mounting brackets included. Compatible with C-channel, flat bar, wood joist bar hanger and EMT. Bar hangers must be ordered separately. C-channel are recommended for T-bar ceilings. Maximum ceiling thickness is 1 1/4".

EMERGENCY BACKUP
Remote test switch included. Emergency driver operates LED load of up to 7.0 Watts at a nominal 450 lumens for a minimum of 90 minutes.

LISTING/WARRANTY
- ETL listed to US and Canadian standards for wet locations.
- 10-Year Intense LED Limited Warranty

ASSEMBLED IN THE USA

Intense Lighting, LLC | 3340. E La Palma Ave. | Anaheim, CA 92806 | **Phone:** 1.800.961.5321 | **Fax:** 1.800.961.5322 | www.**intenselighting**.com
Note: Specifications and dimensions subject to change without notice.

JOB NAME		CATALOG NUMBER	
NOTES		TYPE	

SS4SG21100358 / ICS435HZ

4" Architectural LED Square / Wall Wash Reflector

Report #: L10135608

Reflector Finish: Haze

Luminaire Watts: 15.73W

Luminaire Lumens: 592.23 lm

Lumens Per Watt: 37.65

Color Temperature: 3425K

Color Rendering Index: 83.6

Lighting Facts
Reg. #: L5DN-CWCAFF

LM-79-08 IESNA

Distribution Curve

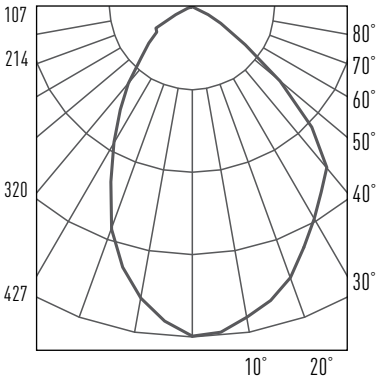

Distance From Ceiling	2' From Wall On 3' Centers (3')			3' From Wall On 3' Centers (3')			3' From Wall On 4' Centers (4')		
1'	5	2	5	1	1	1	1	1	1
2'	21	15	21	5	5	5	5	3	5
3'	14	17	14	10	12	10	9	8	9
4'	10	12	10	9	12	9	8	9	8
5'	7	8	7	7	8	7	6	8	6
6'	5	5	5	5	6	5	5	5	5
7'	3	4	3	4	4	4	4	4	4
8'	2	3	2	3	3	3	3	3	3
9'	2	2	2	2	3	2	2	2	2
10'	1	2	1	2	2	2	2	2	2
11'	1	1	1	2	2	2	1	2	1
12'	1	1	1	1	1	1	1	1	1
13'	1	1	1	1	1	1	1	1	1
14'	1	1	1	1	1	1	1	1	1

SS4SG21500358 / ICS435HZ

4" Architectural LED Square / Wall Wash Reflector

Report #: L10135610

Reflector Finish: Haze

Luminaire Watts: 18.72W

Luminaire Lumens: 809.4 lm

Lumens Per Watt: 43.24

Color Temperature: 3409K

Color Rendering Index: 82.2

Lighting Facts
Reg. #: L5DN-SFBVQ6

LM-79-08 IESNA

Distribution Curve

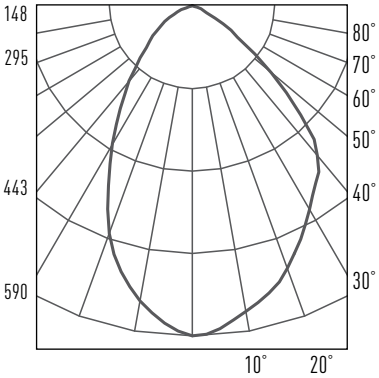

Distance From Ceiling	2' From Wall On 3' Centers (3')			3' From Wall On 3' Centers (3')			3' From Wall On 4' Centers (4')		
1'	7	4	7	1	1	1	1	1	1
2'	26	19	26	7	7	7	6	5	6
3'	19	22	19	13	15	13	12	11	12
4'	13	15	13	12	15	12	10	12	10
5'	9	10	9	9	11	9	8	10	8
6'	6	7	6	7	8	7	6	7	6
7'	5	5	5	5	6	5	5	5	5
8'	3	4	3	4	4	4	4	4	4
9'	2	3	2	3	3	3	3	3	3
10'	2	2	2	3	3	3	2	3	2
11'	2	2	2	2	2	2	2	2	2
12'	1	1	1	2	2	2	2	2	2
13'	1	1	1	1	1	1	1	1	1
14'	1	1	1	1	1	1	1	1	1

All testing was conducted in accordance with **LM-79-08**, Approved Method: Electrical and Photometric Measurements of Solid-State Lighting Products as published by the Illuminating Engineering Society of North America (IESNA).

ASSEMBLED IN THE USA

Intense Lighting, LLC | 3340. E La Palma Ave. | Anaheim, CA 92806 | **Phone:** 1.800.961.5321 | **Fax:** 1.800.961.5322 | www.**intenselighting**.com

Note: Specifications and dimensions subject to change without notice.

JOB NAME		CATALOG NUMBER	
NOTES		TYPE	

SS4SG22000358 / ICS435HZ

4" Architectural LED Square / Wall Wash Reflector

Report #: L10135702

Reflector Finish: Haze

Luminaire Watts: 24.59W

Luminaire Lumens: 1022.86 lm

Lumens Per Watt: 41.6

Color Temperature: 3360K

Color Rendering Index: 83.2

Lighting Facts
Reg. #: L5DN-7ANJBH

LM-79-08 IESNA

Distribution Curve

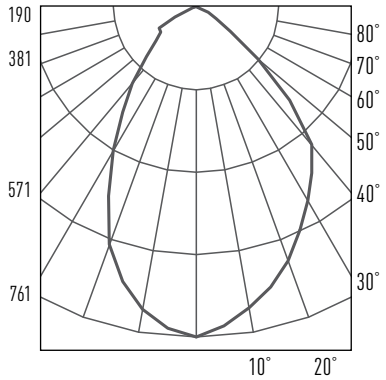

Distance From Ceiling	2' From Wall On 3' Centers			3' From Wall On 3' Centers			3' From Wall On 4' Centers		
	3'			3'			4'		
1'	7	3	7	1	1	1	1	1	1
2'	28	21	28	6	6	6	6	4	6
3'	23	28	23	14	16	14	13	11	13
4'	16	19	16	14	18	14	12	15	12
5'	11	13	11	12	13	12	10	12	10
6'	8	9	8	9	10	9	8	9	8
7'	6	6	6	7	7	7	6	7	6
8'	4	5	4	5	6	5	5	5	5
9'	3	3	3	4	4	4	4	4	4
10'	2	3	2	3	3	3	3	3	3
11'	2	2	2	3	3	3	2	3	2
12'	2	2	2	2	2	2	2	2	2
13'	1	1	1	2	2	2	2	2	2
14'	1	1	1	1	1	1	1	1	1

SS4SG23000358 / ICS435HZ

4" Architectural LED Square / Wall Wash Reflector

Report #: L10135704

Reflector Finish: Haze

Luminaire Watts: 37.58W

Luminaire Lumens: 1572.83 lm

Lumens Per Watt: 41.85

Color Temperature: 3330K

Color Rendering Index: 82.7

Lighting Facts
Reg. #: L5DN-8ZJREG

LM-79-08 IESNA

Distribution Curve

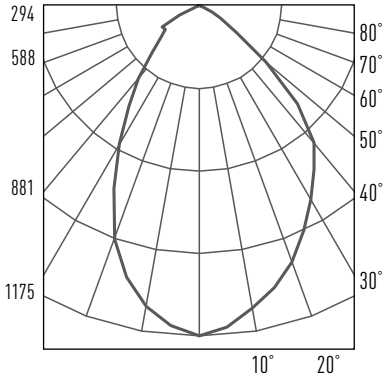

Distance From Ceiling	2' From Wall On 3' Centers			3' From Wall On 3' Centers			3' From Wall On 4' Centers		
	3'			3'			4'		
1'	12	5	12	2	2	2	1	1	1
2'	46	34	46	10	10	10	10	6	10
3'	36	43	36	23	27	23	21	18	21
4'	25	29	25	22	28	22	19	23	19
5'	17	20	17	18	20	18	15	18	15
6'	12	14	12	14	15	14	12	14	12
7'	9	10	9	10	11	10	9	10	9
8'	6	7	6	8	9	8	7	8	7
9'	5	5	5	6	7	6	6	6	6
10'	4	4	4	5	5	5	5	5	5
11'	3	3	3	4	4	4	4	4	4
12'	2	2	2	3	3	3	3	3	3
13'	2	2	2	3	3	3	2	3	2
14'	2	2	2	2	2	2	2	2	2

All testing was conducted in accordance with **LM-79-08**, Approved Method: Electrical and Photometric Measurements of Solid-State Lighting Products as published by the Illuminating Engineering Society of North America (IESNA).

ASSEMBLED IN THE USA

Intense Lighting, LLC | 3340. E La Palma Ave. | Anaheim, CA 92806 | **Phone:** 1.800.961.5321 | **Fax:** 1.800.961.5322 | www.**intenselighting**.com

Note: Specifications and dimensions subject to change without notice.

DIMMING COMPATIBILITY

JOB NAME		CATALOG NUMBER	
NOTES		TYPE	

0-10V DIMMING

- 120V or 277V
- Dims down to 1% or 10% light output
- Consult dimming manufacturer for installation instructions and power packs

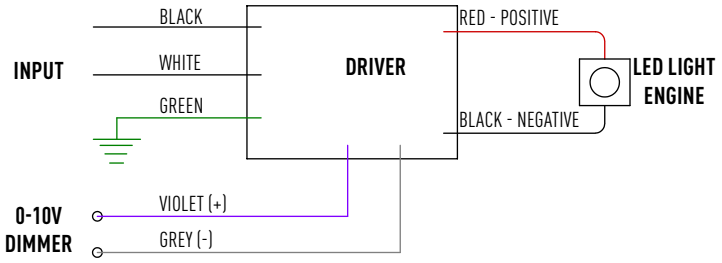

COMPATIBLE DIMMERS

Manufacturer	Part Number(s)
HUNT	PS-010-IV-120V, PS-010-WH-120V, PS-010-3W-IV-120, PS-010-3W-WH-120V, PS-010-IV-277V, PS-010-WH-277V, PS-010-3W-IV-277V, PS-010-3W-WH-277V, FD-010: PS-IFC-010-IV, PS-IFC-010-WH-120/277V, FD-010: PS-IFC-010-3W-IV, PS-IFC-010-3W-WH-120/277V, FD-010-120V, FD-010-277V
Leviton	Leviton Centura Fluorescent Control System, IllumaTech™ IP7 Series, DPSPE-212
Lightolier	ZP600FAM120, MP1500FAM120, V2000FAMU
Lithonia	LEQ BC, LEQ LVBC, SLD LVBC, SQ1DC
Lutron	DVTV, NTFTV
Synergy	ISD BC 120/277

LUTRON ECOSYSTEM® DIMMING

- 120V or 277V
- Dims down to less than 1% or 5% light output
- Consult dimming manufacturer for installation instructions

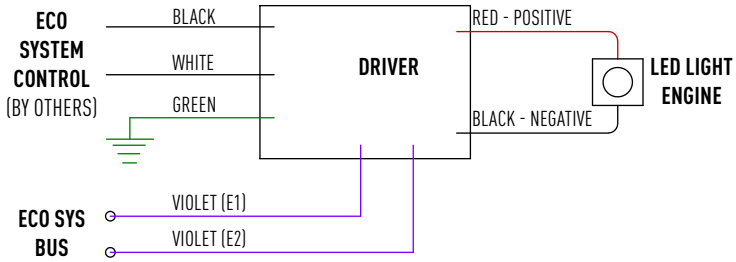

COMPATIBLE DIMMERS

Product	Part Number(s)
EcoSystem	CS-1L-WM, CS-2L-WM, CS-1L-CM, CS-2L-CM, EcoSystem ESN, Grafik Eye QS with EcoSystem, Quantum

LUTRON HI-LUME® DIMMING

- 120V or 277V
- Dims down to less than 1% light output
- Consult dimming manufacturer for installation instructions

COMPATIBLE DIMMERS

Product	Part Number(s)
NovaT	NTF-10, NTF-103P, NTF-103P-277, NTF-10-277
Nova	NF-10, NF-103P, NF-103P-277, NF-10-277
Vareo	VF-10
Skylark	SF-10P, SF-12P-277, SF-12P-277-3, SF-103P
Diva	DVF-103, DVF-103P-277, DVSCF-103P, DVSCF-103P-277
Ariadni	AYF-103P, AYF-103P-277
Vierti	VTF-6AM
Maestro	MAF-6AM, MAF-6AM-277, MSCF-6AM, MCSF-6AM-277
Maestro Wireless	MRF2-F6AN-DV
Spacer System	SPSF-6A, SPSF-6A-277, SPSF-6AM, SPSF-6AM-277
Lyneo	LXF-103PL, LXF-103PL-277
Radio RA 2	RRD-F6AN-DV
HomeWorks QS	HQRD-F6AN-DV

ASSEMBLED IN THE USA

Intense Lighting, LLC | 3340. E La Palma Ave. | Anaheim, CA 92806 | **Phone:** 1.800.961.5321 | **Fax:** 1.800.961.5322 | www.**intenselighting**.com

Note: Specifications and dimensions subject to change without notice.