CORELITE™

DESCRIPTION

The Corelite R3 LED combines the internally developed Linear LED platform from Cooper Lighting with the high sense of style and superior brightness management that characterizes the CoreLite Class R family. The proprietary LED platform delivers a soft, diffuse volume of pure white light that carries the general character of a fluorescent source while simultaneously eliminating unsightly socket shadows and the hassle of luminaire maintenance. A guaranteed system life of 50,000 hrs combined with exceptional efficacy make the R3 LED the ultimate solution to satisfy the most stringent energy requirements with an ultra-light carbon footprint.

Catalog #		Type
Project		
Comments		Date
Prepared by		

SPECIFICATION FEATURES

A ... Construction
Low profile housing constructed of die formed 20 gauge cold rolled steel with integral 20 gauge gear tray.

B ... Reflectors
Precision tooled, high reflectance sheet metal which allows for easy access to driver compartment from below ceiling plenum.

C ... Shielding
High light transmission clear acrylic outer lens contains acrylic frosted sheet inlay with perf pattern. Each component contains UV inhibitors. The lens assembly minimizes lamp image and ensures efficient light distribution. Lenses secured to housing via injection molded inserts for easy lamp access.

D ... Electrical
Fixture equipped with proprietary Cooper LED modules available in 3000, 3500 or 4000k with a CRI plus or minus 85. Removable module features aluminum extrusion providing exceptional thermal management. Modules are driven using universal voltage switch mode LED drivers. Fixture and modules certified to UL and CUL standards. A 0 to 10V dimming control is available (standard).

E ... Finish
Fixture housings are high reflectance white using electrostatically applied polyester powder coat paint.

Mounting
Standard flange design works with most lay in ceiling types. Integral pryout tabs secure luminaire to ceiling grid from above. Fixture offers tie in locations for tie wire on all corners, consult local code for appropriate tie wire recommendations.

NOTE: Concealead Ceiling
Class R may be installed into inaccessible ceilings (sheet rock, wood panel, etc.). This is achieved with the Metalux DFW series drywall frame-in kit, ordered separately from Metalux. Specify CC for the Corelite Ceiling Type. Specify the following part numbers separately, from Metalux: For 2x2, order Metalux part DF-22W-U.

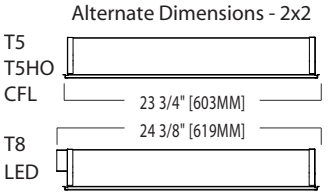

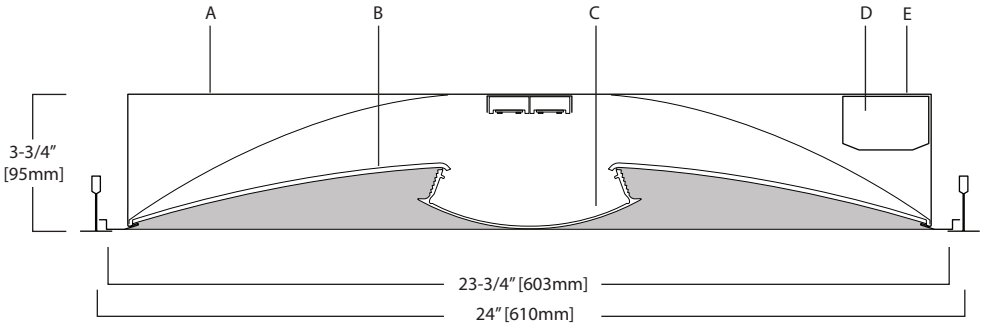

CLASS R3

Rectangular Perf Inlay

Round Perf Inlay

LED

2'x2' Recessed
3-3/4" Depth

ORDERING INFORMATION

Sample Number: R3-WG-1L30-1C-UNV-22-T1

Series
R3: Class R3

Reflector
W: White

Shielding
D: Round Perf Inlay
G: Rectangular Perf Inlay

Light Level
1: Light Level 1
2: Light Level 2

Color Temperature
L30: LED, 3000K
L35: LED, 3500K
L40: LED, 4000K

Number of Circuits
1: 1 Circuit

Wiring [1]
B: Battery Pack
C: Standard Circuit
D: Dimming
E: Emergency
T: Nightlight
Y: Daylight

Voltage [1]
120: 120V
277: 277V
347: 347V
UNV: Universal (120V-277V)

Size
22: 2' x 2'

Ceiling Type
T1: 1" Grid, Slot-Grid, 9/16" Tegular
T9: 9/16" Grid
CC: Concealed Ceiling
SU: Surface Mount

Options [1]
AR: Air Return
CP: Chicago Plenum
NY: New York City Construction
W6: 6' Whip Flex
W12: 12' Whip Flex

Notes: 1 Not all options available. Please consult your Cooper Lighting Representative for availability.

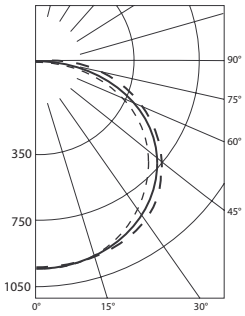

R3-WD-2L35-2x2
2901 Lumens
34.5 Watts
84.2 LPW
LED ALM 2.0

Test Report: #P22367

Coefficients of Utilization

Effective floor cavity reflectance 20%

rc	80%				70%				50%			30%			10%			0%
rw	70	50	30	10	70	50	30	10	50	30	10	50	30	10	50	30	10	0
RCR																		
0	119	119	119	119	116	116	116	116	111	111	111	106	106	106	102	102	102	100
1	108	103	99	95	105	101	97	93	97	93	90	93	90	87	89	87	85	83
2	98	90	82	76	95	88	81	76	84	79	74	81	76	72	78	74	70	68
3	89	78	70	63	87	77	69	63	74	67	61	71	65	60	68	63	59	57
4	82	69	60	53	79	68	59	53	65	58	52	63	57	51	61	55	51	48
5	75	62	52	46	73	61	52	45	58	51	45	56	50	44	55	49	44	42
6	69	55	46	40	67	54	46	40	53	45	39	51	44	39	49	43	38	36
7	64	50	41	35	62	49	41	35	48	40	35	46	39	34	45	39	34	32
8	60	46	37	31	58	45	37	31	44	36	31	42	36	31	41	35	30	29
9	56	42	34	28	54	41	33	28	40	33	28	39	32	28	38	32	27	26
10	52	39	31	25	51	38	30	25	37	30	25	36	30	25	35	29	25	23

Candela

Angle	0-Deg	23-Deg	45-Deg	68-Deg	90-Deg
0	971	971	971	971	971
5	969	967	966	965	966
10	954	955	956	956	957
15	931	934	937	940	942
20	899	901	908	913	917
25	855	859	869	878	883
30	803	810	824	840	846
35	746	752	774	796	806
40	680	690	719	754	766
45	609	622	661	702	716
50	536	549	598	644	661
55	452	473	526	580	598
60	371	395	453	509	530
65	289	316	374	436	464
70	211	238	299	366	400
75	135	165	223	292	326
80	73	99	147	195	214
85	29	41	57	63	74
90	0	0	0	0	0

Zonal Lumen Summary

Zone	Lumens	% Lamp	% Fixture
0-30	757	N.A.	26.1
0-40	1242	N.A.	42.8
0-60	2223	N.A.	76.6
0-90	2901	N.A.	100
40-90	1659	N.A.	57.2
60-90	678	N.A.	23.4
90-180	0	N.A.	0
0-180	2901	N.A.	100

Luminance Data

Angle in Deg	0-Deg cd/sm	45-Deg cd/sm	90-Deg cd/sm
45	2468	2678	2901
55	2258	2627	2987
65	1959	2535	3146
75	1494	2469	3609
85	953	1874	2433

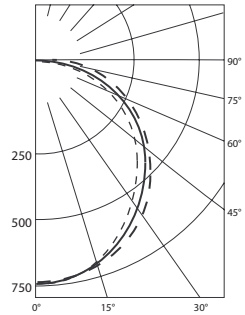

R3-WD-1L35-2x2
2260 Lumens
28.1 Watts
80.4 LPW
LED ALM 2.0

Test Report: #P22359

Coefficients of Utilization

Effective floor cavity reflectance 20%

rc	80%				70%				50%			30%			10%			0%
rw	70	50	30	10	70	50	30	10	50	30	10	50	30	10	50	30	10	0
RCR																		
0	119	119	119	119	116	116	116	116	111	111	111	106	106	106	102	102	102	100
1	108	103	99	95	105	101	97	93	97	93	90	93	90	87	89	87	85	83
2	98	89	82	76	95	87	81	75	84	78	74	81	76	72	77	74	70	68
3	89	78	70	63	87	77	69	62	74	67	61	71	65	60	68	63	59	57
4	81	69	60	53	79	68	59	53	65	58	52	63	56	51	61	55	50	48
5	75	61	52	45	73	60	52	45	58	51	45	56	49	44	54	48	44	41
6	69	55	46	40	67	54	46	39	52	45	39	51	44	39	49	43	38	36
7	64	50	41	35	62	49	41	35	48	40	34	46	39	34	45	39	34	32
8	59	46	37	31	58	45	37	31	44	36	31	42	35	30	41	35	30	28
9	55	42	33	28	54	41	33	28	40	33	28	39	32	27	38	32	27	25
10	52	39	31	25	51	38	30	25	37	30	25	36	30	25	35	29	25	23

Candela

Angle	0-Deg	23-Deg	45-Deg	68-Deg	90-Deg
0	748	748	748	748	748
5	745	744	744	744	744
10	735	735	736	737	737
15	717	719	722	725	727
20	693	696	700	705	708
25	659	663	673	679	683
30	619	625	637	650	656
35	575	584	601	618	627
40	525	533	558	587	596
45	472	483	513	547	559
50	413	427	466	503	518
55	351	370	412	455	471
60	288	308	354	401	420
65	228	248	295	346	368
70	163	187	236	291	318
75	107	129	177	232	260
80	58	78	117	154	169
85	22	32	44	49	56
90	0	0	0	0	0

Zonal Lumen Summary

Zone	Lumens	% Lamp	% Fixture
0-30	584	N.A.	25.8
0-40	960	N.A.	42.5
0-60	1725	N.A.	76.3
0-90	2260	N.A.	100
40-90	1300	N.A.	57.5
60-90	535	N.A.	23.7
90-180	0	N.A.	0
0-180	2260	N.A.	100

Luminance Data

Angle in Deg	0-Deg cd/sm	45-Deg cd/sm	90-Deg cd/sm
45	1912	2079	2265
55	1753	2058	2353
65	1546	2000	2495
75	1184	1959	2878
85	723	1446	1841