ALCON LIGHTING

SHOP NOW

Alcon Lighting **2105 Viva** Incandescent 600W Single Pole 3-Way Dimmer with Fan Speed Controls

FEATURES & SPECIFICATIONS

SPEC GRADE

LIMITED 1 YEAR WARRANTY

INTENDED USE

The **Viva Incandescent Slide-to-Off Single Pole 120V Dimmer** is a captive linear-slide dimmer featuring precise color matching built with heavy duty components to ensure reliability and long life. The Viva is an ideal choice for dimming solutions.

DETAILS

W 2.94" x **L** 4.69" x **D** .30"
Construction: Standard single-pole and 3-way wiring for easy installation
Captive Linear Slider
Built-in soft-glow night light
Accessible air-gap switch
Electrostatic discharge tested
Superior RFI suppression

ADDITIONAL FEATURES

Voltage: 120V 60 Hz
Voltage Compensation
Max Capacity: 600W
Emergency: Power Failure Memory

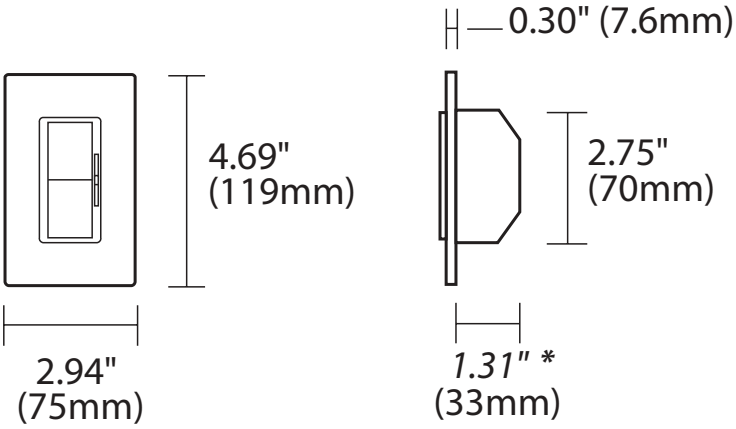

Ordering Information:

Example: (2105)

Model	Finish	
2105	**(Blank)**	White
	BE	Beige
	IV	Ivory
	AM	Almond
	LA	Light Almond
	GR	Gray
	TP	Taupe
	SN	Sienna
	BL	Black
	BR	Brown