SHOP NOW

Project Name: _____ Type: _____ Quantity: _____

Alcon 14144-S Recessed 2-Inch Square LED Fixture

FIXTURE SPECIFICATIONS

INTENDED USE

Install our premium recessed lighting with this high-CRI, efficient 2-inch LED downlight for low to medium ceilings. The light provides clear, bright illumination in office, retail, hospitality and other commercial—also residential—interiors. Our 120-volt Light-Emitting Diode (LED) light is airtight-rated and available in white or black.

FEATURES

Construction: Die-cast extruded aluminum body
Housing: No housing required, IC Air-Tight rated
CRI: 90+
Voltage: 120V
Life: 60,000 Hours L70
Voltage: 120V
Beam Spread: 36° Flood
Dimming: Dims down to 10% with ELV or TRIAC drivers
Operating Temp: 0°C to 40°C ambient temperature
Quick Connect Extension Cable: Optional cable can be used to extend the length between fixture and driver. Can be connected together to create custom lengths. Maximum length between fixture and driver is 40 Feet.
Warranty: 5 years carefree for parts & components (labor not included)
Listings: cETLus, FCC, California Title 24 JA8-2019

Square Direct (14144-S-DIR)

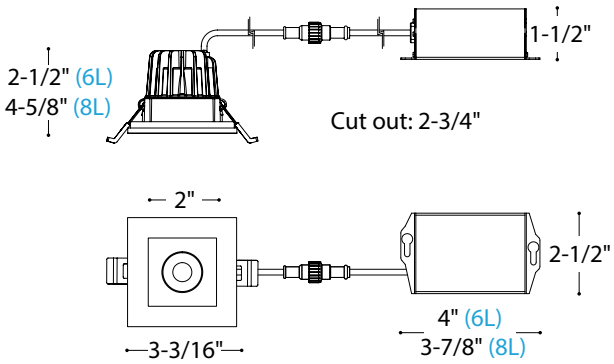

Square Direct with Baffle (14144-S-DIR-B)

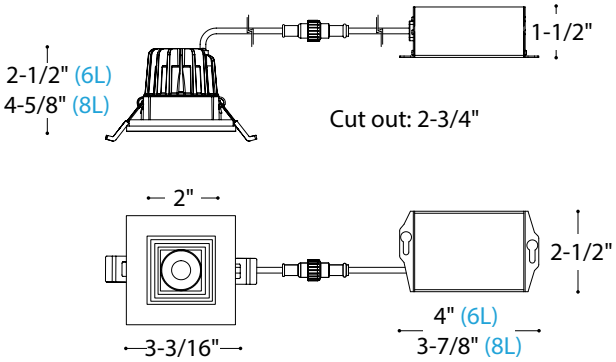

ORDERING INFORMATION Example: (14144-S-DIR-6L-27K-BK)

Model	Type	Wattage | Lumens	Color Temp	Finish	Driver	Options
14144-S	**DIR** Direct **DIR-B** Direct with Baffle	**6L** 8 Watts | 600 lum **8L** 10 Watts | 850 lum	**27K** 2700K **30K** 3000K	**BK** Black **WH** White	**(Blank)** ELV **TRI** TRIAC	**QC4** 4 Foot Quick Connect Extension Cable **QC10** 10 Foot Quick Connect Extension Cable **UNCP** Universal New Construction Plate

NEW CONSTRUCTION PLATE DIMENSIONS

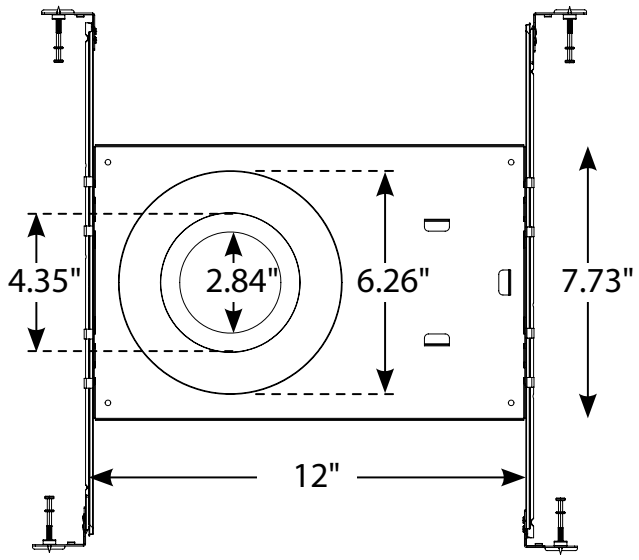

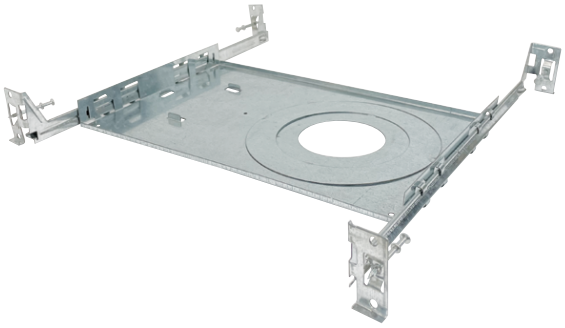

PHOTOMETRICS

Information

Part Number: **14144-S-6L-27K**
Beam Spread: 36° Flood
Lumens: 612lm
Wattage: 8.26W
Efficacy: 74lpw
CCT / CRI: 2700K / 90 CRI
Spacing Criteria (0º-180): 0.6
Spacing Criteria (90º-270): 0.6

Polar Curve

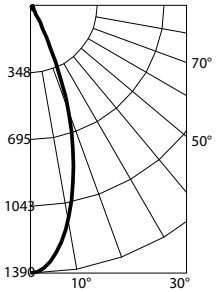

Illuminance at a Distance

Distance from Luminaire	FC at Nadir	Beam Diameter
2'	346fc	1'-4"
4'	86.4fc	2'-7"
6'	38.4fc	3'-11"
8'	21.6fc	5'-2"
10'	13.8fc	6'-7"

Zonal Lumen Summary

Zone	Lumens	% Luminaire
0-30	513	83.8
0-40	556	90.9
0-60	592	96.9
0-90	610	99.8
90-180	1	0.2
0-180	612	100

Candela Table

Vertical Angles	Candela
0	1383
5	1319
15	868
25	316
35	52
45	24

Information

Part Number: **14144-S-6L-30K**
Beam Spread: 36° Flood
Lumens: 629lm
Wattage: 8.08W
Efficacy: 78lpw
CCT / CRI: 3000K / 90 CRI
Spacing Criteria (0º-180): 0.6
Spacing Criteria (90º-270): 0.6

Polar Curve

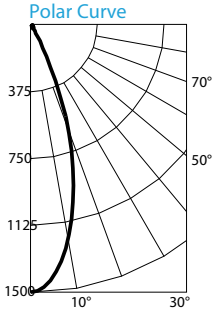

Illuminance at a Distance

Distance from Luminaire	FC at Nadir	Beam Diameter
2'	375fc	1'-4"
4'	93.7fc	2'-7"
6'	41.7fc	3'-11"
8'	23.4fc	5'-2"
10'	15fc	6'-6"

Zonal Lumen Summary

Zone	Lumens	% Luminaire
0-30	537	85.4
0-40	575	91.4
0-60	609	96.9
0-90	626	99.5
90-180	3	0.5
0-180	629	100

Candela Table

Vertical Angles	Candela
0	1500
5	1423
15	934
25	293
35	42
45	22

Information

Part Number: **14144-S-8L-30K**
Beam Spread: 36° Flood
Lumens: 869lm
Wattage: 10.18W
Efficacy: 85lpw
CCT / CRI: 3000K / 90 CRI
Spacing Criteria (0º-180): 0.6
Spacing Criteria (90º-270): 0.6

Polar Curve

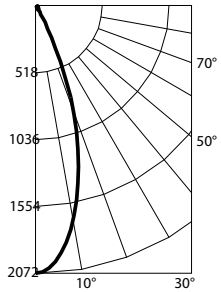

Illuminance at a Distance

Distance from Luminaire	FC at Nadir	Beam Diameter
2'	518fc	1'-4"
4'	130fc	2'-7"
6'	57.6fc	3'-11"
8'	32.4fc	5'-2"
10'	20.7fc	6'-6"

Zonal Lumen Summary

Zone	Lumens	% Luminaire
0-30	748	86.1
0-40	799	92
0-60	844	97.2
0-90	867	99.8
90-180	2	0.2
0-180	869	100

Candela Table

Vertical Angles	Candela
0	2072
5	1968
15	1286
25	429
35	56
45	29
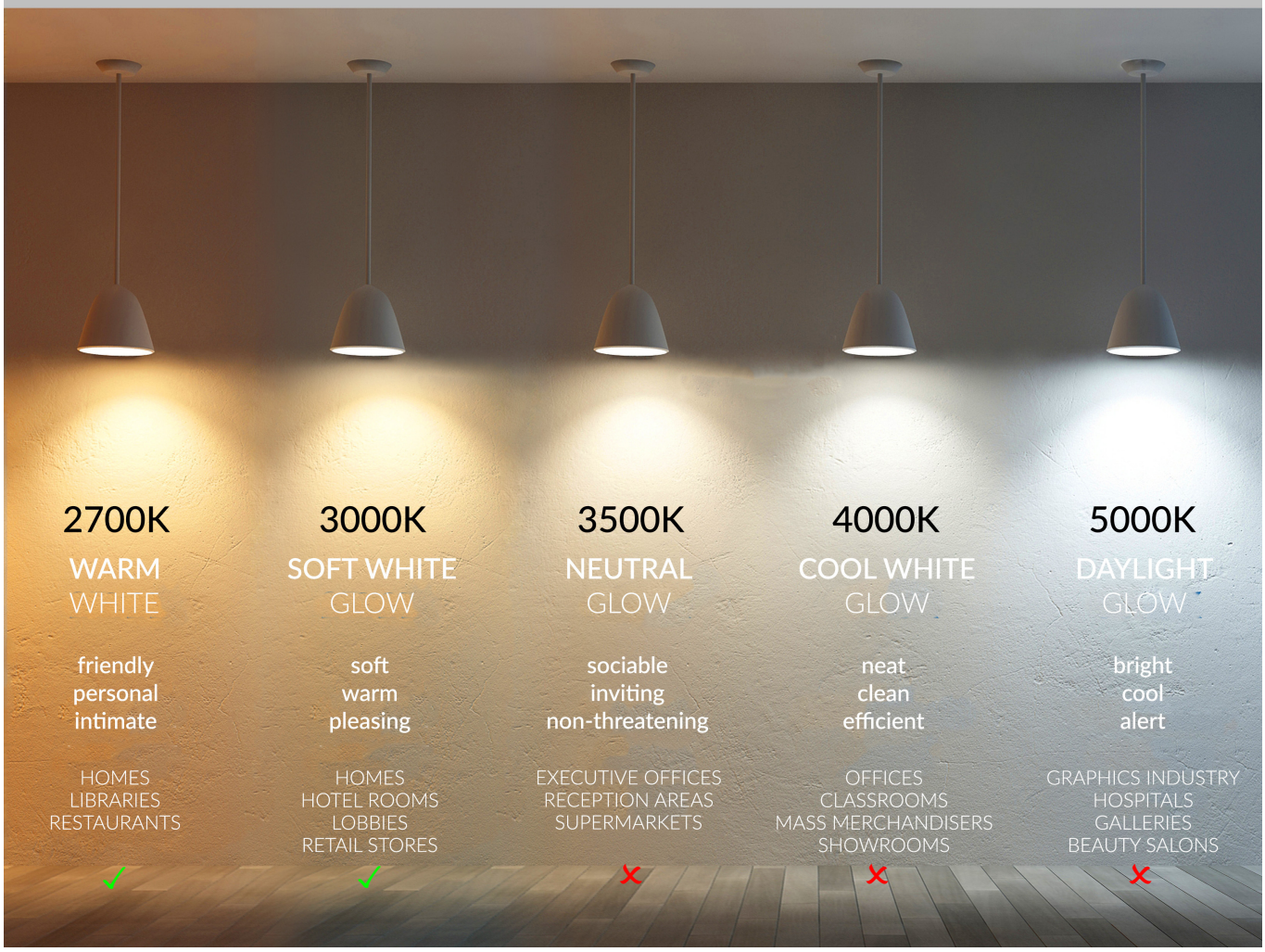
COLOR TEMPERATURE GUIDE