ALCON LIGHTING

SPECIFICATION SHEET

Shop Now

Project Name: _____ Type: _____ Quantity: _____

Alcon Lighting 14125 Recessed Volumetric Flat-Panel Contemporary LED Troffer Light

INTENDED USE

This contemporary commercial and architectural-grade, 1x4, 2x2 or 2x4 LED troffer light in 120 to 277 voltage delivers stylish design and clear illumination to commercial, hospitality and residential interiors. Dimming with varying lumens outputs and wattage provides versatility in direct downlighting for office lighting as well as classrooms, conference rooms, museums, retail outlets and hotels and restaurants.

FEATURES

Construction: Low profile diecast aluminum frame, powder-coated white.
Lens: Flat optic, low-glare micro-prismatic lens delivers a unified glare gating of less than 19
Lumens: up to 98 lumens per watt efficiency
Voltage: 120-277V (50/60 Hz) constant current
Dimming: DecoMesh Bluetooth driver is standard. Fixture also works with 0-10V and Triac dimming drivers
Color Temperature: Color temperature selectable switch (3000K-3500K-4000K).
CRI: 90+
Life: 54,000 hours L70; 51,000 hours L90
Operating Temperature: -40ºC to +50ºC
Power Factor: > 0.95
Warranty: 5 years carefree for parts & components (labor not included)
Listings: UL listed, FCC compliant

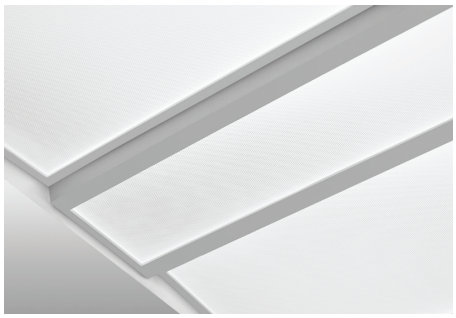

Closeup

SPEC GRADE · 5 YEAR WARRANTY · DIMMABLE · c UL us · FCC · ASSEMBLED IN USA

ORDERING INFORMATION Example:(14125-22-20)

Model	Size | Wattage | Lumens		
14125	**14-20** 1x4 | 20W | 1980L	**22-20** 2x2 | 20W | 1980L	**24-26** 2x4 | 26W | 2444L
	14-26 1x4 | 26W | 2574L	**22-26** 2x2 | 26W | 2574L	**24-35** 2x4 | 35W | 3290L
	14-35 1x4 | 35W | 3465L	**22-35** 2x2 | 35W | 3465L	**24-45** 2x4 | 45W | 4230L

Options	
E	Emergency Backup
ES1	Lutron LDE1 Series EcoSystem 1% Dimming with soft on fade to Black
TW	Tunable White Driver 1%, two-channel

PHOTOMETRICS

POLAR GRAPH
14125-22

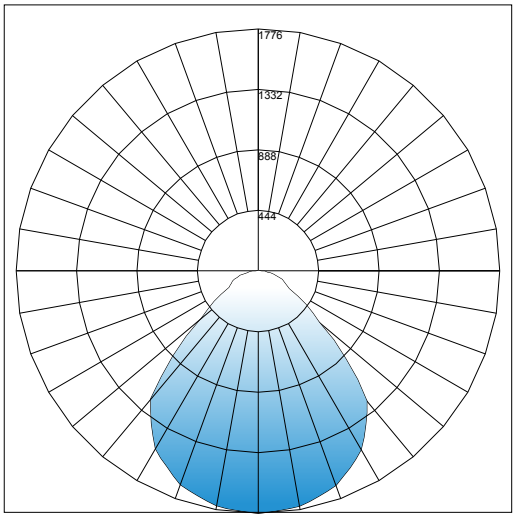

Maximum Candela = 1776.271 Located At Horizontal Angle = 0, Vertical Angle = 0
1 - Vertical Plane Through Horizontal Angles (0 - 180) (Through Max. Cd.)

COEFFICIENTS OF UTILIZATION - ZONAL CAVITY METHOD
Effective Floor Cavity Reflectance 0.20

RC	80				70				50			30			10			0
RW	70	50	30	10	70	50	30	10	50	30	10	50	30	10	50	30	10	0
0	119	119	119	119	116	116	116	116	111	111	111	106	106	106	102	94	94	100
1	110	106	102	99	108	104	100	97	100	97	94	96	94	91	92	90	89	87
2	102	94	88	83	99	92	87	82	89	84	80	86	82	79	83	80	77	75
3	94	84	77	71	91	83	76	71	80	74	69	77	72	68	75	71	67	65
4	87	76	68	62	84	74	67	61	72	66	61	70	64	60	68	63	59	57
5	80	68	60	54	78	67	60	54	65	59	53	63	58	53	62	56	52	50
6	74	62	54	48	73	61	54	48	60	53	48	58	52	47	56	51	47	45
7	69	57	49	43	68	56	48	43	55	48	43	53	47	42	52	46	42	40
8	65	52	44	39	63	52	44	39	50	43	38	49	43	38	48	42	38	36
9	61	48	40	35	59	48	40	35	46	40	35	45	39	35	44	39	35	33
10	57	45	37	32	56	44	37	32	43	37	32	42	36	32	41	36	32	30

LUMINANCE DATA (cd/sq.m)

Angle In Degrees	Angle In Degrees	Angle In Degrees	Angle In Degrees
45	3480	3563	3912
55	1997	2897	1730
65	1424	1954	1278
75	1448	1853	1660
85	1511	1656	1244

FIXTURE DIMENSIONS

1x4

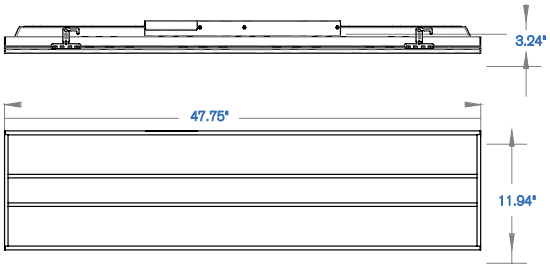

2x2

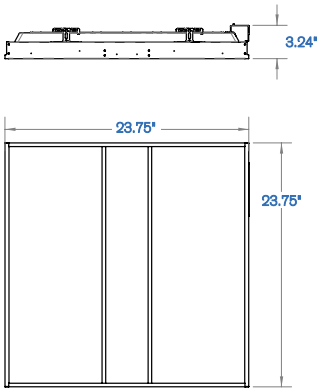

2x4

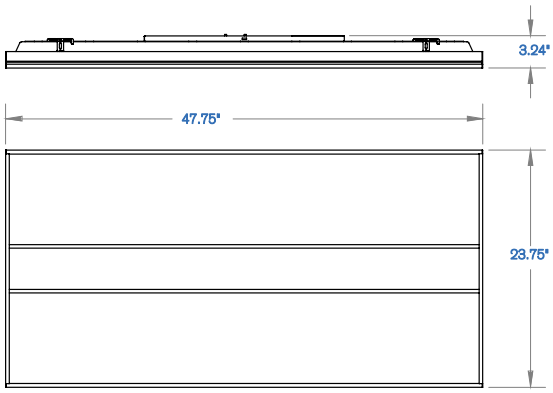

COLOR TEMPERATURE GUIDE