ALCON LIGHTING

SPECIFICATION SHEET

Shop Now

Project Name: Type: Quantity:

INTENDED USE

This sleek linear architectural LED fixture combines design flexibility with practical illumination. Its slim-profile aluminum housing integrates seamlessly into high-end drywall applications, offering pixel-free, shadow-free light for a clean aesthetic. Ideal for offices, museums, retail spaces, hotels, and restaurants, it enhances ambiance while delivering efficient lighting. With tandem mounting for continuous runs and a modern design, this fixture is perfect for spaces requiring both elegance and functionality.

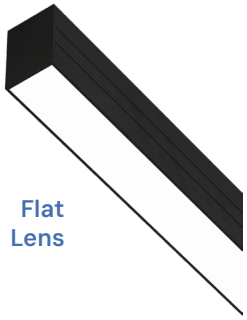

Flat Lens

Regressed Lens

Wallwash Flat Lens

FEATURES

Construction: Extruded aluminum housing with powder coat finish
Shapes: Provided with pre-fabricated corners that are fully illuminated
Wattage: 50/75/100% selectable switch
Driver: 0-10V dims to 10%
Emergency Battery: External 90 min. w/ test switch
Color Temperature: 30/35/40K selectable switch
Light Distribution: 100% down
Voltage: 110-277V
CRI: 80+
Life: 50,000 Hours
Warranty: 5 Years carefree for parts & components (Labor not included)
Listings: cULus listed for damp locations

Lens	Lumen Package for 100% Down		
	High	Medium	Low
Flat	1000lm, 10w/ft	750lm, 7.5w/ft	500lm, 5w/ft
Regressed	800lm, 10w/ft	600lm, 7.5w/ft	400lm, 5w/ft

SPEC GRADE · 5 YEAR WARRANTY · CCT SELECTABLE · WATTAGE SELECTABLE · DAMP · EMERGENCY BATTERY · c UL us

ORDERING INFORMATION Example: 12100-21-P-R-S2-WH-H-AC5-R-EM8

Model	Mounting	Lens	Shape [3]			Finish	Ceiling [5]	Cable [5]	Canopy Shape [6]	Options
12100-21	**P** Pendant **W** Wall **S** Surface **RT** Recessed T-bar Grid **RS** Recessed Screw Slot Grid **RF** Recessed Flanged **RTL** Recessed Trimless	**Blank** Flat Standard **R** [1] Regressed **WF** [2] Wallwash Flat	**S**𝑥 **CR**𝑥 [4] **RC**𝑥𝑥 **SQ**𝑥 **L**𝑥𝑥	Single Run Continuous Run Rectangle Square "L" Shape	𝑥 = 2', 3', 4', 6' or 8' 𝑥 = Length 𝑥𝑥 = Width & Length 𝑥 = Length 𝑥𝑥 = Leg 1, Leg 2	**WH** White **BK** Black	**Blank** Not Required **H** Standard Hard / Drywall J-Box Mount **S9** Screw Slot Grid 9/16" **S15** Screw Slot Grid 15/16" **T** T-bar Grid 9/16" & 15/16"	**Blank** Not Required **AC5** Standard 5' Adjustable Aircraft Cable **AC12** 12' Adjustable Aircraft Cable	**Blank** Not Required **R** Standard Round **S** Square	**XEM8** 8W External Emergency Battery **XEM25** 25W External Emergency Battery **OS** [7,8] Occupancy Sensor

1 Only available with single and continuous run
2 Not available with Wall mount
3 All shapes other than single and continuous runs are formed using housing sizes of 2', 3', 4', 6', and 8' Please notice the additional lengths of the joiners on Pg.4
4 See Chart on Pg.7
5 Only required for pendant mount
6 Canopy finish matches the mount
7 Only available with recessed and pendant mount
8 Only available with round canopy

LINE DRAWINGS & DIMENSIONS

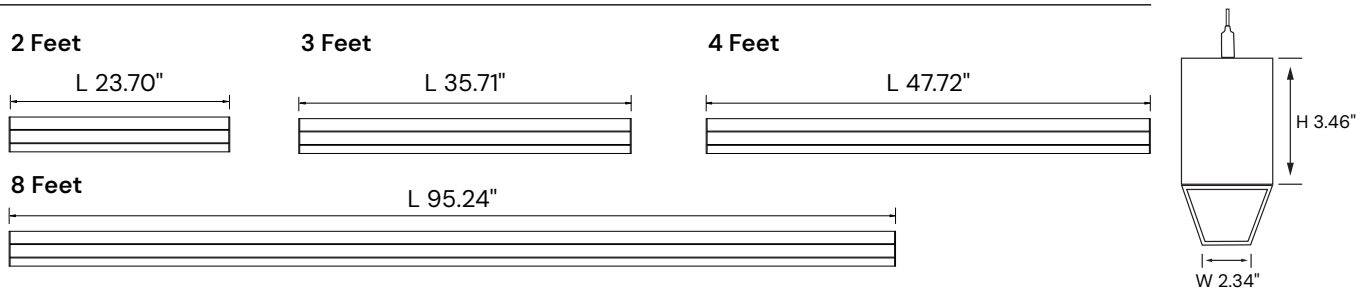

MOUNTING LOCATION

Recessed

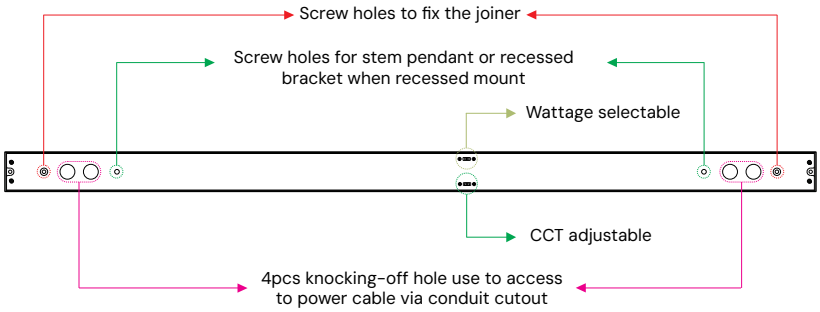

Pendant

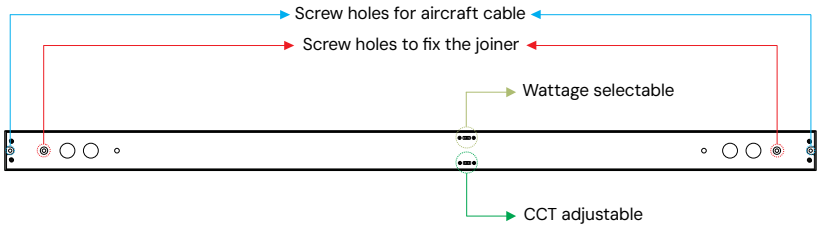

Surface

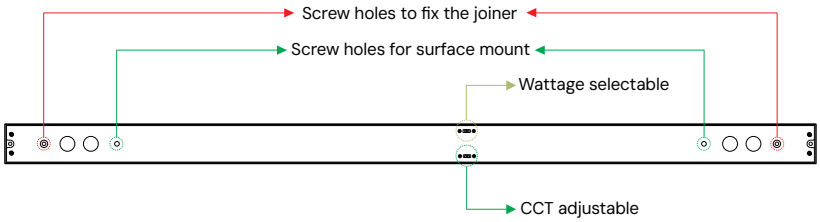

Wall

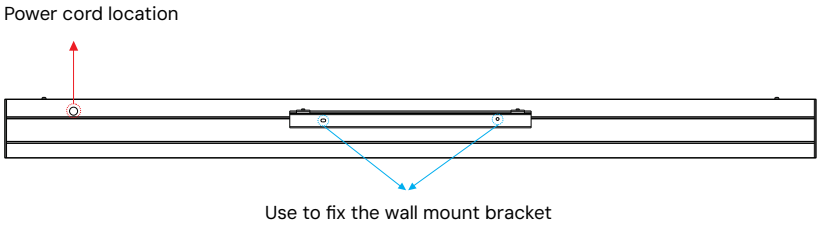

SHAPE DESIGNS

Recessed

Flat Lens

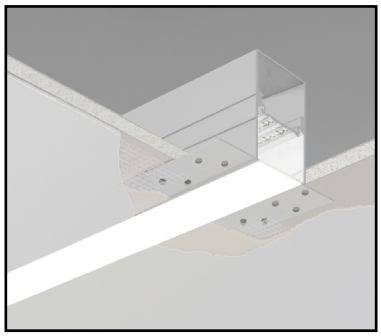

Regressed Lens

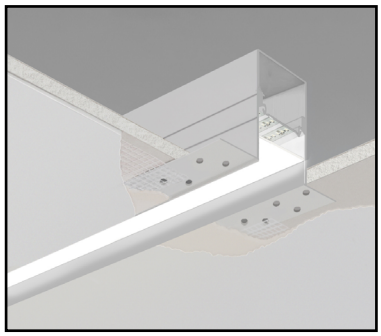

Wallwash Flat Lens

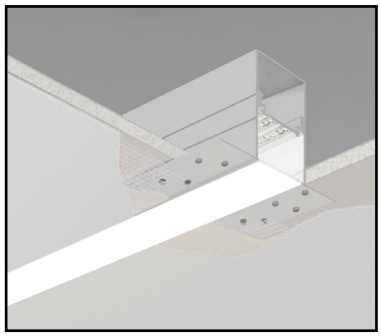

Pendant

Flat Lens

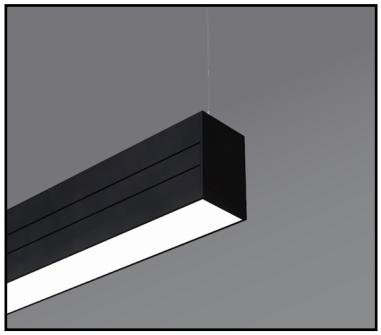

Regressed Lens

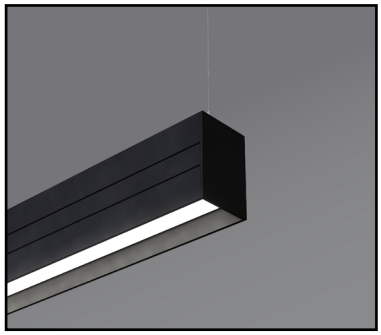

Wallwash Flat Lens

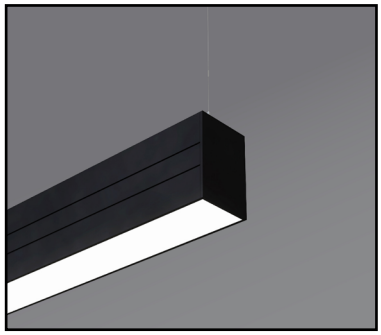

Surface

Flat Lens

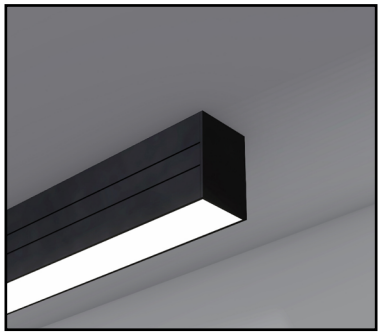

Regressed Lens

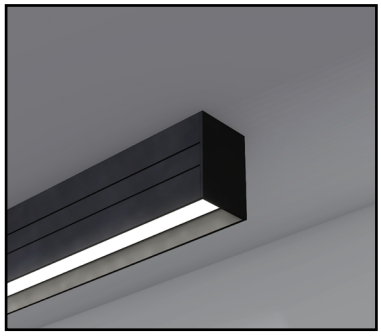

Wallwash Flat Lens

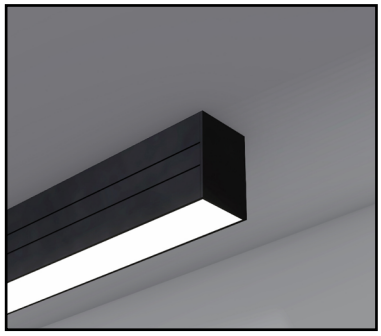

Wall

Flat Lens

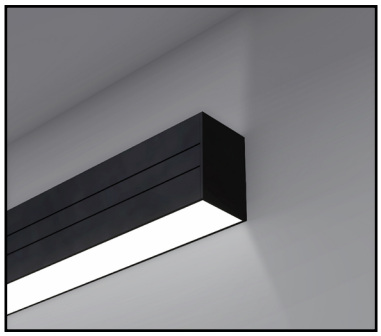

Regressed Lens

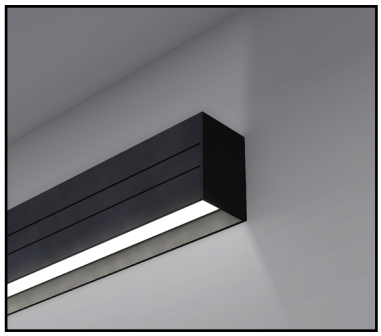

JOINER OPTIONS

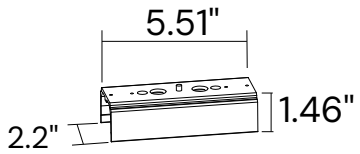

Run Joiner

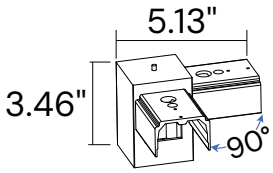

"L" Joiner

LIGHT DISTRIBUTION

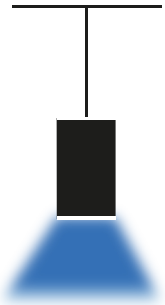

100% Down

AVAILABLE MOUNTINGS

Accessories for Surface & Wall (Included)

Mounting Kits

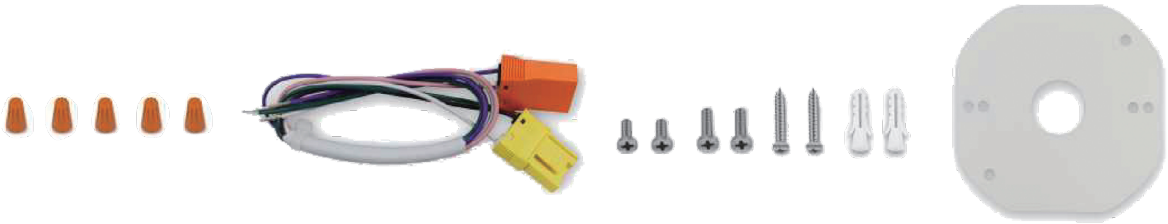

AVAILABLE MOUNTINGS

Recessed in Hard Drywall Ceiling

Trimless

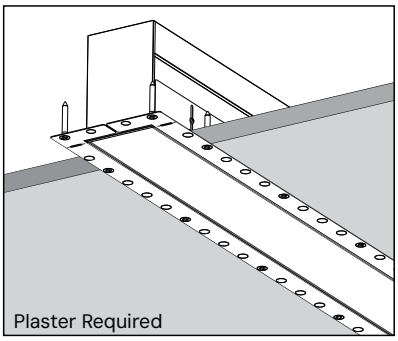

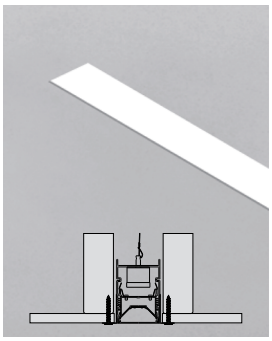

Mounting Kits

Flanged

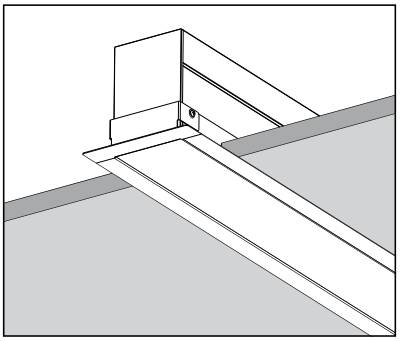

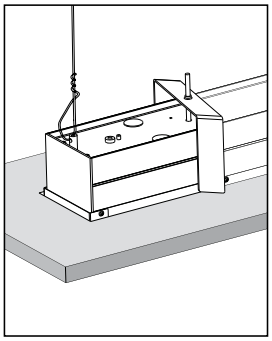

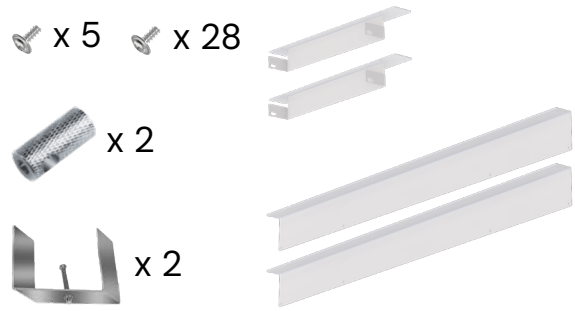

Recessed in Grid Ceiling

T-Grid

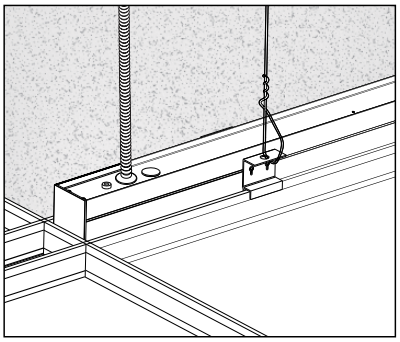

When installing seamless continuous runs in a standard or existing T-grid ceiling, a gap will form between the fixture's end and the ceiling grid. This gap should be filled with gypsum board.

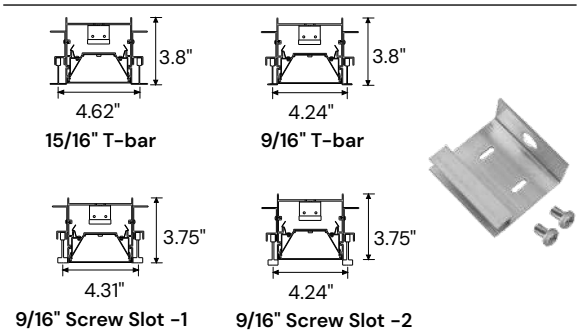

AVAILABLE MOUNTINGS

Pendant Canopy Style

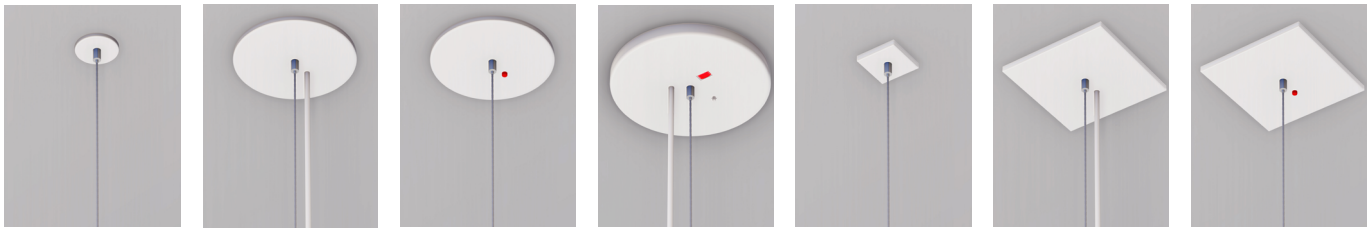

1.6" Round (Non-Power Feed) | 4.5" Round (Power Feed) | 4.5" Round with Emergency Driver (Non-Power Feed) | 5.8" Round with Occupancy Sensor (Power Feed) | 1.6" Square (Non-Power Feed) | 4.5" Square (Power Feed) | 4.5" Square with Emergency Driver (Non-Power Feed)

Hard Drywall Ceiling

Mount to J-box

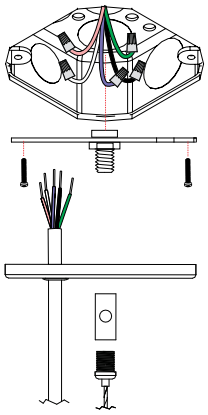

Grid Ceiling

Compatible with 9/16" and 15/16" T-bar and Screw Slot

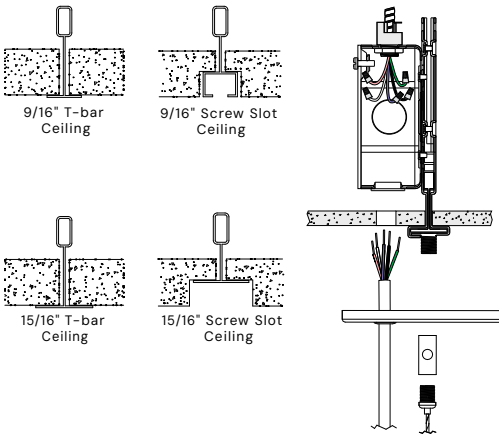

Pendant Accessories for Hard Drywall and Grid Ceiling (Included)

Hard Drywall Ceiling Canopy Kits

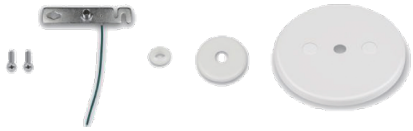

Grid Ceiling Canopy Kits

Junction Box

Aircraft Cable Kits

Power Cord Kits

T-grid Clips

For 9/16" and 15/16" T-bar Ceiling (2 Clips/Set) | For 9/16" Screw Slot Ceiling (2 Clips/Set) | For 15/16" Screw Slot Ceiling (2 Clips/Set)

CONTINUOUS RUN CHART (120V)

Run Length (ft)	Run Configuration	Run Joiner	Power Cable	Aircraft Cable	Canopy
2	2'	-	1	2	2
4	4'	-	1	2	2
6	4'+2'	1	1	3	3
8	8'	-	1	2	2
10	8'+2'	1	1	3	3
12	8'+4'	1	1	3	3
14	8'+4'+2'	2	1	4	4
16	8'+8'	1	1	3	3
18	8'+8'+2'	2	1	4	4
20	8'+8'+4'	2	1	4	4
22	8'+8'+4'+2'	3	1	5	5
24	8'+8'+8'	2	1	4	4
26	8'+8'+8'+2'	3	1	5	5
28	8'+8'+8'+4'	3	1	5	5
30	8'+8'+8'+4'+2'	4	1	6	6
32	8'+8'+8'+8'	3	1	5	5
34	8'+8'+8'+8'+2'	4	1	6	6
36	8'+8'+8'+8'+4'	4	1	6	6
38	8'+8'+8'+8'+4'+2'	5	1	7	7
40	8'+8'+8'+8'+8'	4	1	6	6

Note: 4.5" canopy is designed for power cable

Individual

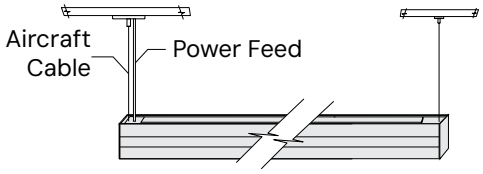

Continuous Run

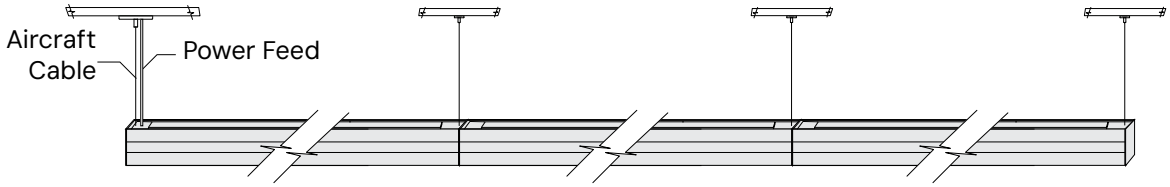

120VAC: Connections up to 40ft.
277VAC: Connections up to 100ft.

EXTERNAL EMERGENCY BATTERY WITH TEST SWITCH

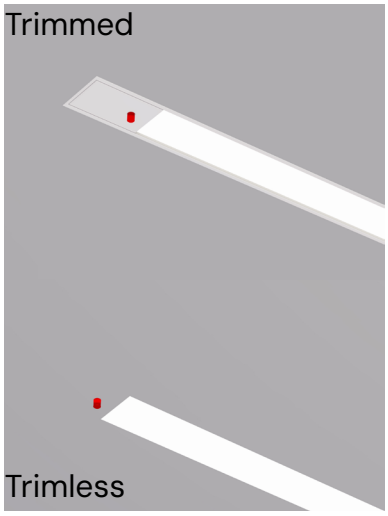

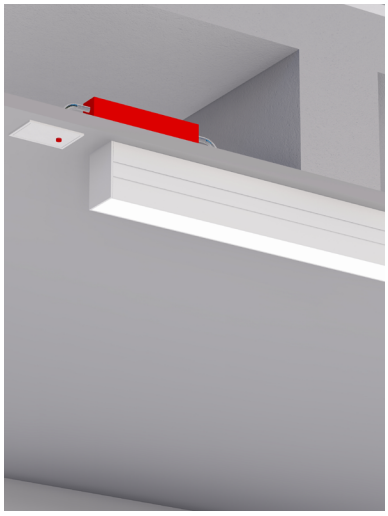

All mounting options come with UL and CEC Listed LED emergency drivers. In the event of an AC power failure, the system automatically switches to emergency mode, providing at least 90 minutes of illumination. Once power is restored, it seamlessly returns to charging mode, ensuring compliance with critical life-safety lighting requirements.

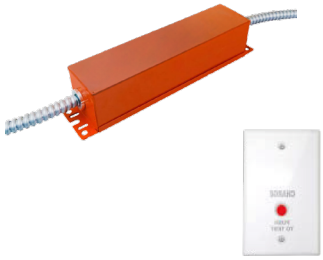

Choose between 8W or 25W emergency back-up battery to ensure essential lighting during power outages.

These options also simplify wiring, helping to reduce labor costs.

Code-Required Testing Switch

First Self-Test:
The system will conduct a functional test 3 seconds after installation to verify wiring and battery output. If there is a failure or error, the indicator LED will turn off or flicker.

Second Self-Test:
A second test will occur 120 minutes later to recheck the system. If the test fails, it will automatically repeat up to 4 times, every 120 minutes.

Monthly Self-Test:
The system will perform an automatic test every 30 days, lasting 3 seconds, to check wiring and battery output. In the event of a failure or error, the indicator LED will turn off or flicker.

OCCUPANCY SENSOR

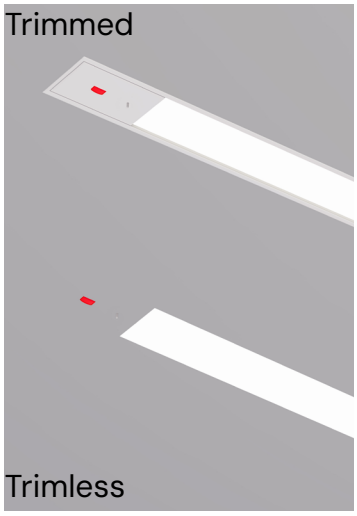

This internal microwave bi-level sensor system control is based on motion and/or daylight contribution with a harvest feature, detecting a 360° range for some areas that require a light change notice before switching off.

Specification

Power Supply	120/277 VAC 50/60Hz
Maximum load @ -40°F ~ +158°F (-40°C ~ +70°C)	Resistive/ Tungsten 600W @ 120V Electronic Ballast (LED) 800VA @ 120V, 1200VA @ 277V
HF System	5.8GHz CW
Dim Control Output	0-10V, Max 0.25mA sinking current
Detection Radius/Angle	Max 26ft. (8m)/360
Mounting Height	Max 12ft
Humidity	Max 95% RH
Temperature	-40°F ~ +158°F (-40°C ~ +70°C)

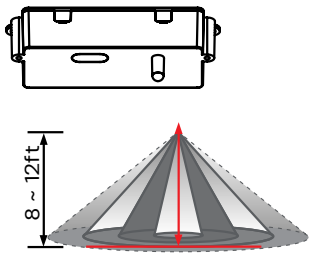

Height of installation 8~12ft

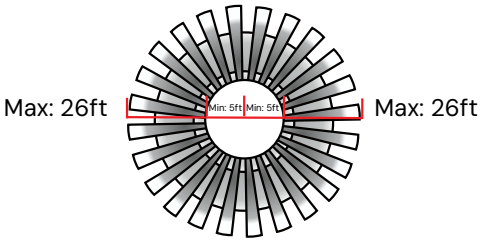

(Height of installation 8ft)
Detection Range

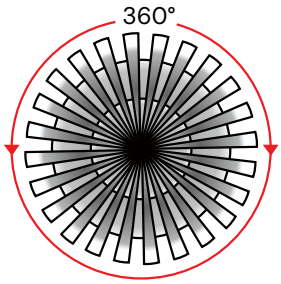

Detection Angle

PHOTOMETRY

4'/ Flat Lens / 3500K

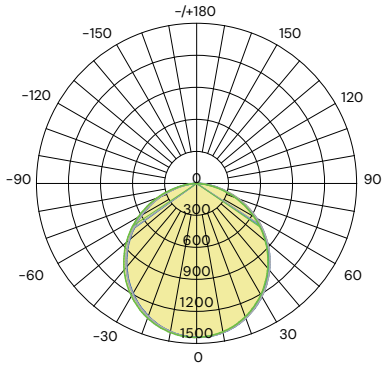

AVERAGE BEAM ANGLE (50%): 111.3°

Lumens: 4069.1 Lms
Watts: 39.05 W
LPW: 104.21 Lm/W
CCT: 3500K

UNIT:cd
- C0/180, 110.8°
- C30/210, 111.1°
- C60/240, 111.6°
- C90/270, 111.7°

Zonal Flux Diagram

T	CO	C45	C90	C135	C180
10	1418	1421	1412	1398	1411
20	1340	1346	1331	1303	1327
30	1215	1225	1204	1164	1195
40	1049	1064	1038	988.4	1026
50	852.4	870.0	840.6	783.6	826.6
60	629.7	649.8	617.5	555.5	603.1
70	391.9	412.3	377.6	316.3	365.5
80	162.5	178.2	145.8	98.44	139.5
90	2.417	8.146	0.2768	0.4688	0.9405
100	0.5822	0.5917	0.6472	0.7610	0.6802
110	1.012	1.048	1.172	1.246	1.138
120	1.530	1.577	1.753	1.778	1.633
130	2.021	2.104	2.307	2.298	2.124
140	2.524	2.612	2.799	2.78	2.595
150	3.936	3.052	3.178	3.148	3.016
160	3.376	3.422	3.497	3.478	3.442
170	3.769	3.686	3.712	3.724	3.716
180	3.894	3.751	3.759	3.755	3.904
DEG	LUMINOUS INTENSITY:cd				

Zonal Lumens

T	ϕ total
0-10	136.4
10-20	526.2
20-30	1115
30-40	1822
40-50	2553
50-60	3211
60-70	3708
70-80	3986
80-90	4058
90-100	4059
100-110	4060
110-120	4061
120-130	4063
130-140	4064
140-150	4066
150-160	4068
160-170	4069
170-180	4069
UNIT: lm	

Luminance cd/(m2)

G(DEG)	C0/180	C90/270
85	10884	8777
80	13119	11617
75	14803	13683
70	16064	15274
65	16980	16310
60	17655	17084
55	18170	17649
50	18591	18090
45	18924	18435

4'/ Regressed Lens / 3500K

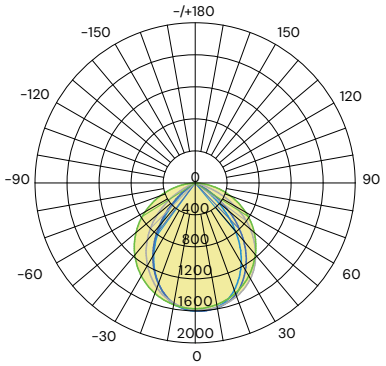

AVERAGE BEAM ANGLE (50%): 92.7°

Lumens: 3185.1 Lms
Watts: 39.18 W
LPW: 81.30 Lm/W
CCT: 3500K

UNIT:cd
- C0/180, 75.9°
- C30/210, 81.3°
- C60/240, 98.3°
- C90/270, 115.4°

Zonal Flux Diagram

T	CO	C45	C90	C135	C180
10	1583	1593	1552	1494	1546
20	1434	1513	1475	1304	1347
30	1163	1339	1349	1044	1044
40	790.0	1073	1178	714.1	652.8
50	382.2	734.4	972.0	357.8	253.6
60	60.93	354.3	733.4	66.49	9.481
70	3.607	50.38	472.8	3.429	1.964
80	1.129	3.391	209.4	1.111	0.5673
90	0.2172	0.8545	0.4901	0.1488	0.1127
100	0.1263	0.1488	0.6813	0.2888	0.1309
110	0.1532	0.3044	1.232	0.7484	0.2482
120	0.4461	0.7326	1.867	1.429	0.6274
130	1.000	1.326	2.485	2.185	1.259
140	1.740	2.047	2.990	2.888	2.048
150	2.579	2.800	3.400	3.436	2.864
160	3.454	3.432	3.725	3.853	3.604
170	4.080	3.887	3.937	4.115	4.176
180	4.329	4.088	3.973	4.031	4.324
DEG	LUMINOUS INTENSITY:cd				

Zonal Lumens

T	ϕ total
0-10	150.3
10-20	574.1
20-30	1189
30-40	1871
40-50	2474
50-60	2884
60-70	3092
70-80	3165
80-90	3176
90-100	3176
100-110	3177
110-120	3178
120-130	3179
130-140	3180
140-150	3182
150-160	3184
160-170	3185
170-180	3185
UNIT: lm	

Luminance cd/(m2)

G(DEG)	C0/180	C90/270
85	91	14627
80	90	16749
75	110	18232
70	146	19198
65	212	19878
60	1692	20373
55	4751	20732
50	8259	21002
45	11457	21208

PHOTOMETRY

4'/ Flat Lens / 100% Down / 4000K

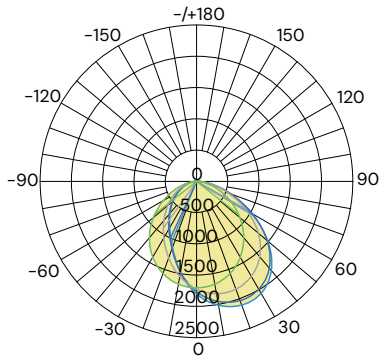

AVERAGE BEAM ANGLE (50%): 91.4°

Lumens: 4602.1 Lms
Watts: 41.95 W
LPW: 109.71 Lm/W
CCT: 4000K

UNIT:cd
- C0/180, 81.4°
- C30/210, 85°
- C60/240, 95.3°
- C90/270, 103.8°

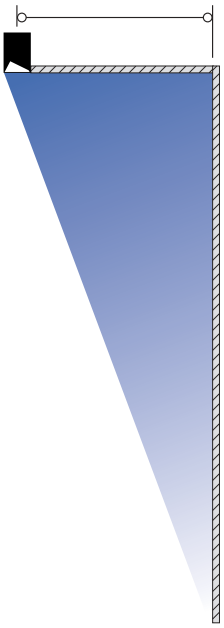

18"-30"
Recommended Distance from Wall

Zonal Flux Diagram

T	CO	C45	C90	C135	C180
10	2010	1892	1670	1472	1483
20	2106	1945	1568	1184	1126
30	2066	1891	1398	927.9	861.6
40	1860	1716	1174	715.0	661.5
50	1489	1408	904.0	528.6	494.0
60	10086	996.3	622.2	361.1	345.2
70	553.6	571.0	356.6	210.1	208.9
80	213.5	226.9	137.6	82.39	92.18
90	14.38	17.50	1.568	1.378	4.851
100	5.281	2.620	0.6399	0.9592	0.9344
110	1.389	0.8569	1.168	1.720	1.700
120	1.055	1.211	1.816	2.574	2.615
130	1.424	1.613	2.405	3.370	3.507
140	1.853	2.077	2.993	3.994	4.244
150	2.385	2.631	3.488	4.418	4.753
160	3.118	3.275	3.898	4.626	5.061
170	4.023	3.919	4.192	4.626	5.093
180	4.706	4.381	4.215	4.300	4.720
DEG	LUMINOUS INTENSITY:cd				

Zonal Lumens

T	ϕ total
0-10	163.5
10-20	625.8
20-30	1318
30-40	2145
40-50	2988
50-60	3717
60-70	4233
70-80	4509
80-90	4586
90-100	4590
100-110	4591
110-120	4593
120-130	4595
130-140	4597
140-150	4599
150-160	4061
160-170	4062
170-180	4062
UNIT: lm	

Luminance cd/(m2)

G(DEG)	CO/180	C90/270
85	14792	9050
80	17074	11003
75	19709	12753
70	22480	14479
65	25273	15947
60	28006	17283
55	30421	18643
50	32173	19532
45	33247	20509

COMPATIBLE DIMMERS

	ALCON LIGHTING	LUTRON	LEVITON
0-10 V	2100 2101 2102	Diva DVTV	IP-710-DL