ALCON LIGHTING

SPECIFICATION SHEET

Shop Now

Project Name: _____ Type: _____ Quantity: _____

INTENDED USE

Alcon Lighting's Outdoor Architectural Area & Site LED Post Light combines sleek design with high-performance illumination, seamlessly integrating into various environments. Its slim, lightweight housing enhances durability by optimizing heat management through convective cooling. Engineered with advanced LED technology, this fixtu e delivers exceptional efficienc , longevity, and uniform illumination, making it a versatile and energy-efficient solution or outdoor lighting applications.

11403-M (100W, 140W, 180W)

11403-L (300W, 400W

FEATURES

Construction: Die-cast aluminum
Finish: Dark Bronze
Color Temperature: 30/40/50K Selectable switch
CRI: 70+
Voltage: 120-277 VAC or 347-480 VAC
Dimming Driver: 0-10V dimming down to 10%
Power Adjustable: 100%, 80%, 60%, 40%
Power Factor: ≥90%
Operating Temperature: -40°F to 113°F. 400W model operates at a maximum temperature of 104 °F
Life: 100,000 Hours
Listings: UL wet location listed, DLC Premium
Warranty: 5 years carefree for parts & components (Labor not included).

SPEC GRADE · 5 YEAR WARRANTY · UL · WET · DLC LISTED PREMIUM · CCT SELECTABLE · WATTAGE SELECTABLE · DarkSky

ORDERING INFORMATION Example: 11403-M-10-T3-UNV-F-4R-PIR

Model	Size	Wattage	Optics	Voltage	Mounting	Mounting Accessories[4,5]	Options[5]
11403	**M** Medium	**10**[1] 100W	**T3** Type 3 Std.	**UNV** 120-277V (Universal)	**F** Fixed Pole	**4R**[6] 4" Round Pole, 2-3/8" O.D.	**PIR** PIR Sensor (plug-in)[7]
		14[1] 140W	**T2**[3] Type 2	**HV** 347-480V (High Voltage)	**A** Adjustable Pole	**4S**[6] 4" Square Pole, 2-3/8" O.D.	**PC** Photocell (plug-in)[7]
		18[1] 180W	**T4**[3] Type 4		**S** Slipfitter	**5R**[6] 5" Round Pole, 2-3/8" O.D.	**GS** External Glare Shield[4]
			T5[3] Type 5		**W** Wall	**5S**[6] 5" Square Pole, 2-3/8" O.D.	**GF** External Glare Full Visor[4]
	L Large	**30**[2] 300W			**Y** Yoke	**A** Adjustable Pole Bracket	
		40[2] 400W				**Y** Yoke Pole Bracket	
						W Wall Square or Round pole, 2-3/8"	
						Wall Brackets, 2-3/8" O.D.	
						PB9 90° Wall Mount Bracket	
						PB Horizontal Tenon	
						Round External Mount Horizontal Tenon, 2-3/8" O.D.	
						D90 Double 90°	
						T12 Triple 120°	
						D18 Double 180°	
						Q90 Quad 90°	
						T90 Triple 90°	

1 Available in Medium size only.
2 Available in Large size only.
3 Additonal charge and lead time of up to 3-4 weeks may apply.
4 Consult stock availability
5 See further information on pages 7 and 8.
6 Accessories designed for mounting onto an existing pole, reducing its diameter to accommodate various configurations.
7 Yoke and Adjustable Pole mounts support only one option—either a PIR sensor or a photocell. All other mount types support both in which the PIR sensor is installed directly on the fixture, while the photocell is mounted on the arm.

STRUCTURAL DESIGN

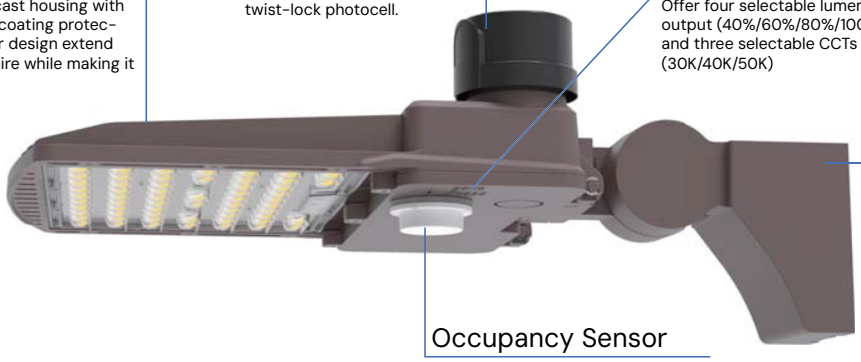

Housing

The one-piece die-cast housing with corrosion-resistant coating protection and the modular design extend the life of the luminaire while making it easy to maintain.

Photocell

Dusk to dawn controls can be utilized via optional twist-lock photocell.

CCT & POWER Adjustable

Offer four selectable lumen output (40%/60%/80%/100%), and three selectable CCTs (30K/40K/50K)

Mounting

Optional for square, round pole mount, Slipfitter, wall mount, yoke mount. All mounting brackets are simple to operate, which can realize single operation and reduce labor costs.

Occupancy Sensor

Optional occupancy sensor allows for security and energy saving.

PHOTOMETRY/OPTICS

A comprehensive range of optical systems designed to meet diverse site lighting needs. These systems offer ex-ceptional flexibility, ensuring precise light distribution tailored to specific requirements.

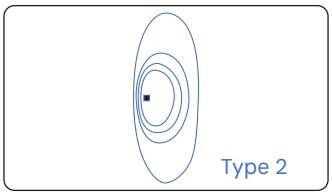

Type 2 optics are designed for applications requiring wider spacing between luminaires along roads or pathways. Their optimized light distribution pattern efficiently eliminates elongated areas, enabling greater pole spacing while maintaining high-quality lighting.

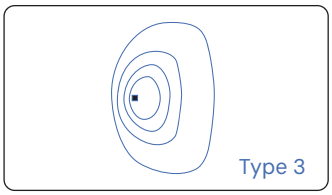

Type 3 optics generate an asymmetrical light pattern, distributing most of the illumination forward and evenly to both sides of the luminaire. When used in a back-to-back configuration, they create a rectangular distribution that allows for extended pole spacing.

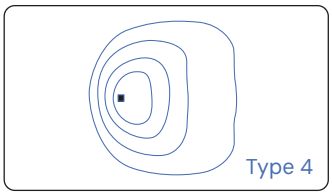

Type 4 optics are ideal for applications that require forward-directed illumination with minimal backlight, making them well-suited for perimeter pole installations.

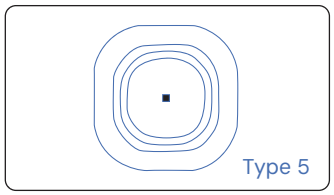

Type 5 optics provide a uniform, symmetrical square light distribution, evenly illumi-nating all sides of the luminaire. This makes Type 5 luminaires a versatile choice for a wide range of area lighting applications.

EFFECTIVE PROJECTED AREA (EPA)

Wattage | Size	1	2 @90°	2 @120°	2@180°	3 @90°	3 @120°	4 @90°
100/140/180W | Medium	0.3632	0.6849	0.8861	0.7264	1.0481	1.2078	1.0481
300/400W | Large	0.4758	0.8091	1.059	0.9516	1.2849	1.3923	1.2849

PERFORMANCE DATA

11403-M-10 (100W)									
SETTING	SYSTEM WATTS	DIST.TYPE	CRI	3000K		4000K		5000K	
				LUMENS	LPW	LUMENS	LPW	LUMENS	LPW
100%	100W	2	70	14500lm	145 lm/W	15800lm	158 lm/W	15000lm	150 lm/W
		3	70	14500lm	145 lm/W	15800lm	158 lm/W	15000lm	150 lm/W
		4	70	14500lm	145 lm/W	15800lm	158 lm/W	15000lm	150 lm/W
		5	70	15100lm	151 lm/W	16000lm	160 lm/W	15600lm	156 lm/W
80%	80W	2	70	12000lm	150 lm/W	13000lm	163 lm/W	12500lm	156 lm/W
		3	70	12000lm	150 lm/W	13000lm	163 lm/W	12500lm	156 lm/W
		4	70	12000lm	150 lm/W	13000lm	163 lm/W	12500lm	156 lm/W
		5	70	12500lm	156 lm/W	13300lm	166 lm/W	12800lm	160 lm/W
60%	60W	2	70	9300lm	155 lm/W	10000lm	167 lm/W	9600lm	160 lm/W
		3	70	9300lm	155 lm/W	10000lm	167 lm/W	9600lm	160 lm/W
		4	70	9300lm	155 lm/W	10000lm	167 lm/W	9600lm	160 lm/W
		5	70	9600lm	160 lm/W	10200lm	170 lm/W	9850lm	164 lm/W
40%	40W	2	70	6400lm	160 lm/W	6800lm	170 lm/W	6560lm	164 lm/W
		3	70	6400lm	160 lm/W	6800lm	170 lm/W	6560lm	164 lm/W
		4	70	6400lm	160 lm/W	6800lm	170 lm/W	6560lm	164 lm/W
		5	70	6560lm	164 lm/W	7000lm	175 lm/W	6700lm	168 lm/W

11403-M-14 (140W)									
SETTING	SYSTEM WATTS	DIST.TYPE	CRI	3000K		4000K		5000K	
				LUMENS	LPW	LUMENS	LPW	LUMENS	LPW
100%	140W	2	70	20000lm	147 lm/W	23000lm	164 lm/W	21000lm	150 lm/W
		3	70	20000lm	147 lm/W	23000lm	164 lm/W	21000lm	150 lm/W
		4	70	20000lm	147 lm/W	23000lm	164 lm/W	21000lm	150 lm/W
		5	70	21000lm	150 lm/W	23500lm	168 lm/W	21500lm	154 lm/W
80%	120W	2	70	18000lm	150 lm/W	20000lm	167 lm/W	18500lm	154 lm/W
		3	70	18000lm	150 lm/W	20000lm	167 lm/W	18500lm	154 lm/W
		4	70	18000lm	150 lm/W	20000lm	167 lm/W	18500lm	154 lm/W
		5	70	18500lm	154 lm/W	20500lm	171 lm/W	19000lm	158 lm/W
60%	90W	2	70	13800lm	153 lm/W	15200lm	169 lm/W	14200lm	158 lm/W
		3	70	13800lm	153 lm/W	15200lm	169 lm/W	14200lm	158 lm/W
		4	70	13800lm	153 lm/W	15200lm	169 lm/W	14200lm	158 lm/W
		5	70	14000lm	156 lm/W	15600lm	172 lm/W	14500lm	161 lm/W
40%	60W	2	70	9400lm	157 lm/W	10300lm	172 lm/W	9700lm	162 lm/W
		3	70	9400lm	157 lm/W	10300lm	172 lm/W	9700lm	162 lm/W
		4	70	9400lm	157 lm/W	10300lm	172 lm/W	9700lm	162 lm/W
		5	70	9600lm	160 lm/W	10500lm	175 lm/W	10000lm	167 lm/W

11403-M-18 (180W)									
SETTING	SYSTEM WATTS	DIST.TYPE	CRI	3000K		4000K		5000K	
				LUMENS	LPW	LUMENS	LPW	LUMENS	LPW
100%	180W	2	70	24800lm	138 lm/W	27000lm	150 lm/W	25200lm	140 lm/W
		3	70	24800lm	138 lm/W	27000lm	150 lm/W	25200lm	140 lm/W
		4	70	24800lm	138 lm/W	27000lm	150 lm/W	25200lm	140 lm/W
		5	70	25500lm	142 lm/W	28000lm	156 lm/W	26000lm	144 lm/W
80%	144W	2	70	20200lm	140 lm/W	22000lm	153 lm/W	20600lm	143 lm/W
		3	70	20200lm	140 lm/W	22000lm	153 lm/W	20600lm	143 lm/W
		4	70	20200lm	140 lm/W	22000lm	153 lm/W	20600lm	143 lm/W
		5	70	20800lm	144 lm/W	22800lm	158 lm/W	21000lm	146 lm/W
60%	108W	2	70	15300lm	142 lm/W	16800lm	156 lm/W	15700lm	145 lm/W
		3	70	15300lm	142 lm/W	16800lm	156 lm/W	15700lm	145 lm/W
		4	70	15300lm	142 lm/W	16800lm	156 lm/W	15700lm	145 lm/W
		5	70	15800lm	146 lm/W	17300lm	160 lm/W	16200lm	150 lm/W
40%	72W	2	70	10500lm	146 lm/W	11500lm	160 lm/W	10800lm	150 lm/W
		3	70	10500lm	146 lm/W	11500lm	160 lm/W	10800lm	150 lm/W
		4	70	10500lm	146 lm/W	11500lm	160 lm/W	10800lm	150 lm/W
		5	70	10800lm	150 lm/W	11800lm	164 lm/W	11000lm	153 lm/W

PERFORMANCE DATA

11403-L-30 (300W)									
SETTING	SYSTEM WATTS	DIST.TYPE	CRI	3000K		4000K		5000K	
				LUMENS	LPW	LUMENS	LPW	LUMENS	LPW
100%	300W	2	70	41000lm	137 lm/W	45000lm	150 lm/W	42000lm	140 lm/W
		3	70	41000lm	137 lm/W	45000lm	150 lm/W	42000lm	140 lm/W
		4	70	41000lm	137 lm/W	45000lm	150 lm/W	42000lm	140 lm/W
		5	70	42500lm	142 lm/W	46000lm	153 lm/W	43500lm	145 lm/W
80%	240W	2	70	33600lm	140 lm/W	37000lm	154 lm/W	34500lm	144 lm/W
		3	70	33600lm	140 lm/W	37000lm	154 lm/W	34500lm	144 lm/W
		4	70	33600lm	140 lm/W	37000lm	154 lm/W	34500lm	144 lm/W
		5	70	34500lm	144 lm/W	38000lm	158 lm/W	35500lm	148 lm/W
60%	180W	2	70	26000lm	144 lm/W	28600lm	159 lm/W	26600lm	148 lm/W
		3	70	26000lm	144 lm/W	28600lm	159 lm/W	26600lm	148 lm/W
		4	70	26000lm	144 lm/W	28600lm	159 lm/W	26600lm	148 lm/W
		5	70	26600lm	148 lm/W	29700lm	165 lm/W	27500lm	153 lm/W
40%	120W	2	70	18000lm	150 lm/W	20000lm	167 lm/W	18500lm	154 lm/W
		3	70	18000lm	150 lm/W	20000lm	167 lm/W	18500lm	154 lm/W
		4	70	18000lm	150 lm/W	20000lm	167 lm/W	18500lm	154 lm/W
		5	70	18500lm	154 lm/W	20800lm	173 lm/W	19000lm	158 lm/W

11403-L-40 (400W)							
SETTING	SYSTEM WATTS	DIST.TYPE	CRI	4000K		5000K	
				LUMENS	LPW	LUMENS	LPW
LV1	400W	2	70	60500lm	151 lm/W	60000lm	150 lm/W
		3	70	60500lm	151 lm/W	60000lm	150 lm/W
		4	70	60500lm	151 lm/W	60000lm	150 lm/W
		5	70	61000lm	153 lm/W	60800lm	152 lm/W
LV2	360W	2	70	56000lm	156 lm/W	55000lm	153 lm/W
		3	70	56000lm	156 lm/W	55000lm	153 lm/W
		4	70	56000lm	156 lm/W	55000lm	153 lm/W
		5	70	56500lm	157 lm/W	55500lm	154 lm/W
LV3	320W	2	70	51000lm	159 lm/W	50000lm	156 lm/W
		3	70	51000lm	159 lm/W	50000lm	156 lm/W
		4	70	51000lm	159 lm/W	50000lm	156 lm/W
		5	70	51500lm	161 lm/W	50500lm	159 lm/W
LV4	300W	2	70	47000lm	162 lm/W	46000lm	159 lm/W
		3	70	47000lm	162 lm/W	46000lm	159 lm/W
		4	70	47000lm	162 lm/W	46000lm	159 lm/W
		5	70	47500lm	164 lm/W	46500lm	160 lm/W

BUG @5000K

SYSTEM WATTS	VOLTAGE	DIST.TYPE	B	U	G
100W	120-277V/347-480V	2	3	0	3
		3	3	0	3
		4	3	0	2
		5	4	0	2
140W	120-277V/347-480V	2	3	0	3
		3	3	0	3
		4	3	0	3
		5	4	0	2
180W	120-277V/347-480V	2	4	0	3
		3	3	0	3
		4	3	0	3
		5	4	0	2
250W	120-277V/347-480V	2	4	0	4
		3	4	0	4
		4	4	0	3
		5	5	0	3
300W	120-277V/347-480V	2	5	0	4
		3	4	0	4
		4	4	0	4
		5	5	0	4
400W	120-277V/347-480V	2	5	0	4
		3	5	0	5
		4	5	0	5
		5	5	0	4

ELECTRICAL DATA

Number Of Drivers	Driver Current (mA)	Nominal Power (W)	INPUT VOLTAGE (V)	CURRENT (Amps)
1	850	100	120	0.83
		100	208	0.48
		100	240	0.42
		100	277	0.36
	2520	100	347	0.29
		100	480	0.21
1	1200	140	120	1.17
		140	208	0.67
		140	240	0.58
		140	277	0.51
		140	347	0.40
		140	480	0.29
1	960	180	120	1.50
		180	208	0.87
		180	240	0.75
		180	277	0.65
		180	347	0.52
		180	480	0.38
1	1200	250	120	2.08
		250	208	1.20
		250	240	1.04
		250	277	0.90
		250	347	0.72
		250	480	0.52
1	1500	300	120	2.50
		300	208	1.44
		300	240	1.25
		300	277	1.08
		300	347	0.86
		300	480	0.63
1	1460	400	120	3.33
		400	208	1.92
		400	240	1.67
		400	277	1.44
		400	347	1.15
		400	480	0.83

MOUNTING OPTIONS

Fixed Pole | F

(4"and 5" Square and Round poles) Standard versatile mounting arm is simple to install and can be used with existing poles for retrofit in tallations

Adjustable Pole | A

Standard versatile mounting arm is simple to install and can be used with existing poles for retrofit installations.

Slipfitter | S

An optional cast aluminum mast arm adapter secures fixture head to nominal 2-3/8"O.D. horizontal steel tenon arm.

Wall | W

Wall Mount is easy to install for direct wall mounting with 1/2' conduit wiring or standard J-box mounting

Yoke | Y

Die-cast aluminum trunnion is easily adapted to many surfaces and allows easy fixture aiming angles.

MOUNTING DIMENSIONS

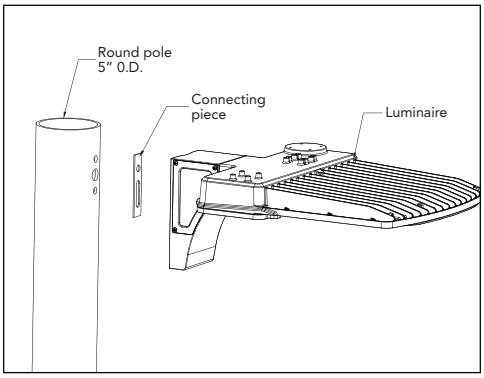

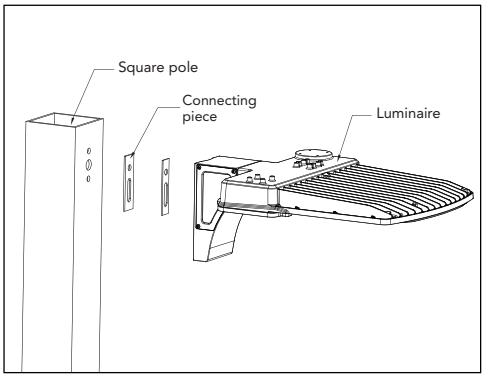

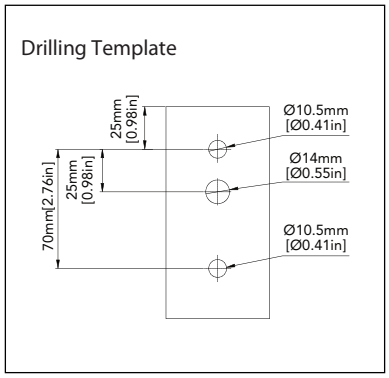

100W/140W/180W
(Adjustable Square Mount)

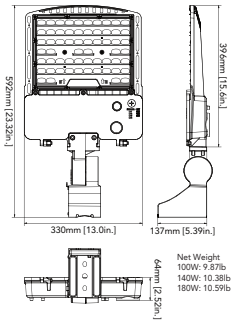

100W/140W/180W
(Slipfitter Mount)

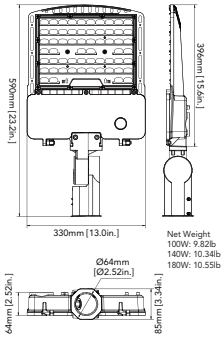

100W/140W/180W
(Wall Mount)

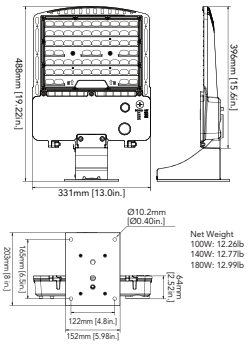

100W/140W/180W
(Pole Mount)

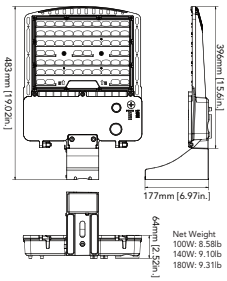

100W/140W/180W
(Yoke Mount)

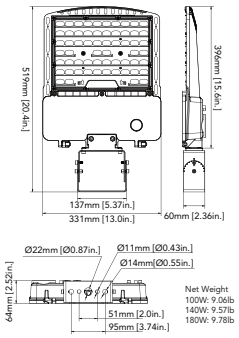

300W/400W
(Adjustable Square Mount)

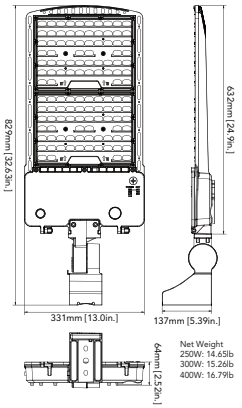

300W/400W
(Slipfitter Mount)

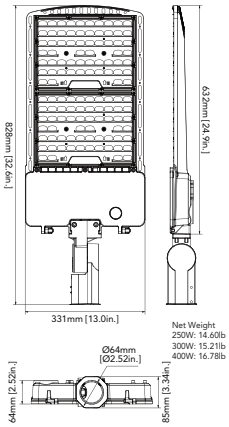

300W/400W
(Wall Mount)

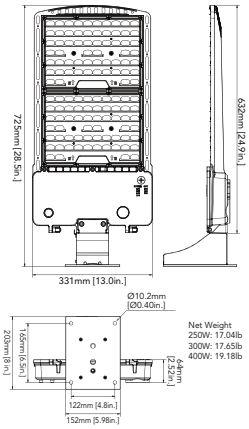

300W/400W
(Pole Mount)

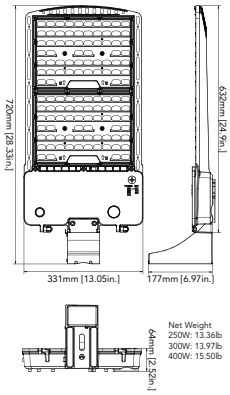

300W/400W
(Yoke Mount)

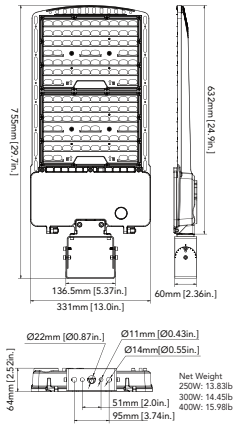

MOUNTING ACCESSORIES

POLE BRA CKET

• For mounting one fixtu e on an existing pole

4" Square Pole with 2-3/8" O.D. Tenon
4S

For use with square, non-tapered steel and aluminum poles. Furnished with four 5/16" hex head stainless-steel bolts. Vertical tenon measures 2-3/8" O.D., and is made of steel tubing. Fixtures mounted to this bracket can be adjusted both vertically andhorizontally.

4" Round Pole with 2-3/8" O.D. Tenon
4R

For use with Round, non-tapered steel and aluminum poles. Furnished with three 3/8" hex head stainless-steel bolts. Vertical tenon measures 2-3/8" O.D., and is made of steel tubing. Fixtures mounted to this bracket can be adjusted both vertically and horizontally.

5" Square Pole with 2-3/8" O.D. Tenon
5S

For use with square, non-tapered steel and aluminum poles. Furnished with four 5/16" hex head stainless-steel bolts. Vertical tenon measures 2-3/8" O.D., and is made of steel tubing. Fixtures mounted to this bracket can be adjusted both vertically and horizontally.

5" Round Pole with 2-3/8" O.D. Tenon
5R

For use with Round, non-tapered steel and aluminum poles. Furnished with three 3/8" hex head stainless-steel bolts. Vertical tenon measures 2-3/8" O.D., and is made of steel tubing. Fixtures mounted to this bracket can be adjusted both vertically and horizontally.

Adjustable Pole Bracket
A

Durable brackets are engineered to provide versatile mounting options. These arms are made from rugged die-cast aluminum. They allow optimal positioning of the light fixtu e to maximize the lighting effectiveness vertically and horizontally.

Yoke Pole Bracket
Y

The 2-3/8" OD Tenon Mount Adaptor for Yoke Fixtures is designed to mount MESTER light fi - tures that are equipped with a yoke mount onto a 2-3/8" OD tenon. It may be utilized with the Mester Flood Light Series of light fixtu es.

Wall Square or Round pole, 2-3/8"
W

This tenon bracket can be installed onto a wall, square pole, round pole. Provides wiring access and abuilt-in 2-3/8" O.D. tenon to mount a fixtu e with our adjustable slipfit er. Suggested 3/8" diameter bolts for mounting.

WALL BRACKET

• Attaches to any flat surface
• Provides wiring access

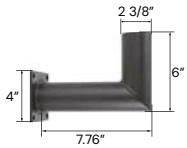

90° Wall Mount Bracket with 2-3/8" O.D. Tenon Size
PB9

The 90° wall mount bracket with 2-3/8" tenon attaches an Alcon Lighting floodlight to almost any surface: wall, roof, or wood pole. Provides wiring access and abuilt-in 2-3/8" O.D. tenon to mount a fixture with our adjustable slipfitter. Suggested 3/8" diameter bolts for mounting. Mounting holes are spaced 3-1/4" apart.

Mid-Pole tenon Bracket

2-3/8" OD Horizontal Tenon Mid-Pole Bracket Size
PB

2-3/8" OD Horizontal Tenon Mid-Pole Bracket is designed to mount light fixture that is equipped with a adjustable slipfitter onto a 2-3/8" OD horizontal tenon

Round External Mount Horizontal Tenon

• To mount 2/3/4 fixtu es on a existing pole

Double 90°
D90

The Bracket is designed to mount over 2-3/8" (60mm) O.D. vertical tenon. Two fixtures can be mounted to the Round External Mount Horizontal Tenon and adjusted horizontally

Triple 120°
T12

The Bracket is designed to mount over 2-3/8" (60mm) O.D. vertical tenon. Three fixtures can be mounted to the Round External Mount Horizontal Tenon and adjusted horizontally

Double 180°
D18

The Bracket is designed to mount over 2-3/8" (60mm) O.D. vertical tenon. Two fixtures can be mounted to the Round External Mount Horizontal Tenon and adjusted horizontally

Quad 90°
Q90

The Bracket is designed to mount over 2-3/8" (60mm) O.D. vertical tenon. Four fixtures can be mounted to the Round External Mount Horizontal Tenon and adjusted horizontally

Triple 90°
T90

The Bracket is designed to mount over 2-3/8" (60mm) O.D. vertical tenon. Three fixtures can be mounted to the Round External Mount Horizontal Tenon and adjusted horizontally

OPTIONS

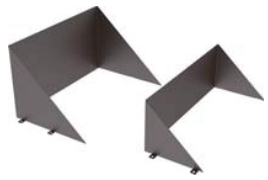

External Glare Shield | GS

External Glare Full Visor | GF

PIR Sensor
PIR
A PIR (Passive Infrared) sensor detects motion by sensing infrared heat emit-ted by people and objects.

NEMA Photocell
PC
The plug-in Photocell is a dusk-to-dawn sensor that automatically controls outdoor lighting based on ambient light levels.

COLOR TEMPERATURE GUIDE
2700K
WARM WHITE
friendly
personal
intimate
HOMES
LIBRARIES
RESTAURANTS
X
3000K
SOFT WHITE GLOW
soft
warm
pleasing
HOMES
HOTEL ROOMS
LOBBIES
RETAIL STORES
✓
3500K
NEUTRAL GLOW
sociable
inviting
non-threatening
EXECUTIVE OFFICES
RECEPTION AREAS
SUPERMARKETS
✓
4000K
COOL WHITE GLOW
neat
clean
efficient
OFFICES
CLASSROOMS
MASS MERCHANDISERS
SHOWROOMS
✓
5000K
DAYLIGHT GLOW
bright
cool
alert
GRAPHICS INDUSTRY
HOSPITALS
GALLERIES
BEAUTY SALONS
X